FACTORYCAT®

TR Parts Manual (EN)

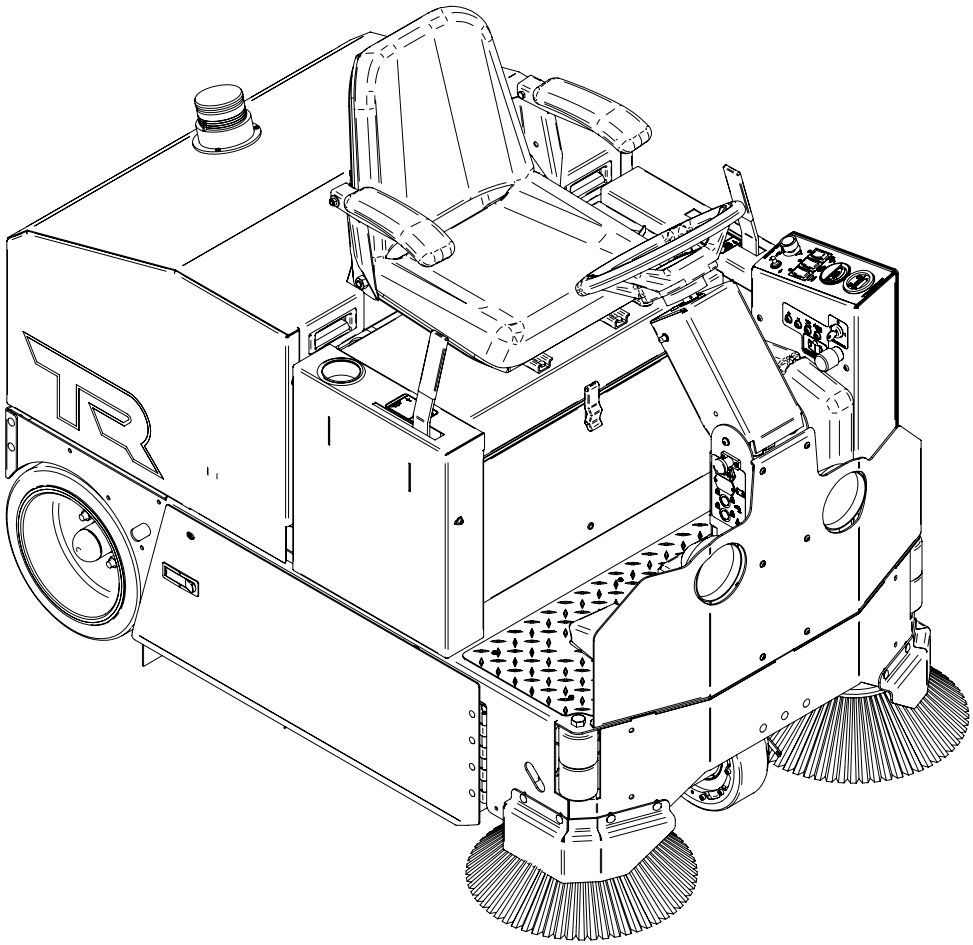

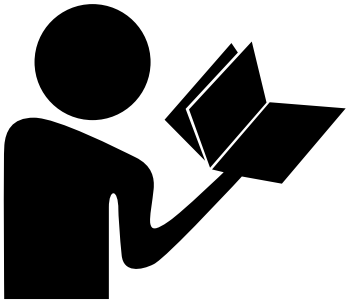

Read the Operators Manual before using the machine.

Read the Safety Messages before servicing machine.

Scan With Phone for more Information

www.factorycat.com
1711 South Street
Racine, WI 53404 (USA)
(800) 634-4060 | (+001) 262-681-3583
© 2017 RPS Corporation

V17.215
FC-TR-P-EN

Front Wheel 4
Side Broom Left Hand 6
Side Broom Right Hand 7
Front Wheel and Side Brooms 8
Main Broom Driver and Idler Arm 10
Hopper 12
Rear Axle 14
Steering Tower 16
Central Command 18
Central Command and Steering Tower 20
Filter Box 22
Main Broom Panel 24
Side Broom Panel 26
Filter Box and Panels 28
Main Broom Motor 30
Jackshaft 32
Main Broom Motor and Jackshaft 34
Rear Hood 36
Options 38
Blower Suction Box 40
Batteries 41
Common Wear Parts 42
Suggested parts inventory 43

10" Front Drive Standard

12" Front Drive Optional

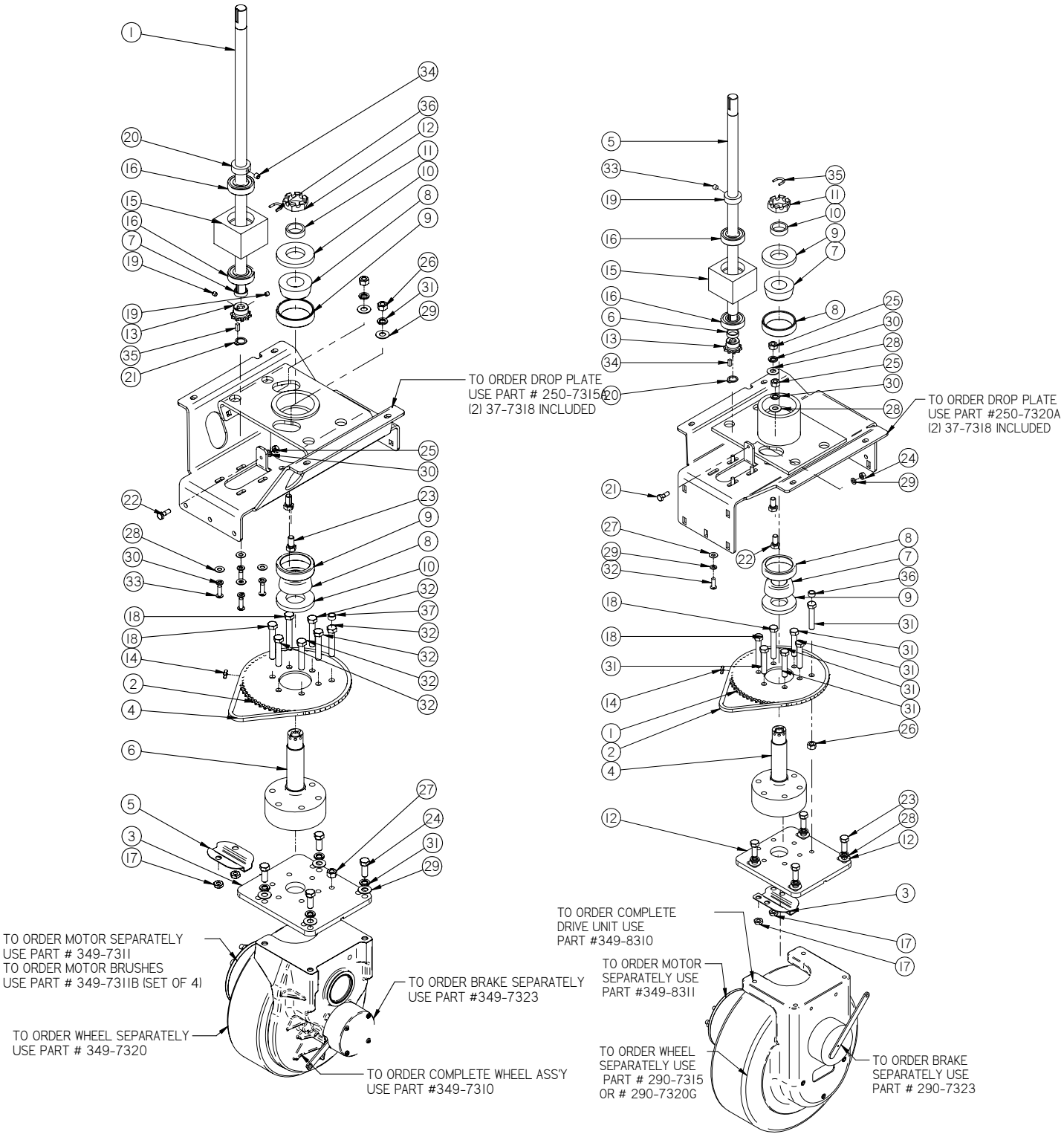

10" Front Drive

Item	Part No.	Part Description	Qty.
1	250-7120	STEERING SHAFT, LOWER	1
2	250-7314	60 TOOTH STEERING SPROCKET	1
3	250-7326	PIVOT PLATE	1
4	250-7327	STEERING CHAIN	1
5	250-7328	WIRE GUIDE	1
6	250-7332	STEERING SHAFT	1
7	290-1218	SPACER 7/8" OD. X 3/4" ID X 1/4" LG	1
8	37-7317	TAPERED ROLLER BEARING	2
9	37-7318	BEARING CAP	2
10	37-7319	STEERING SHAFT SEAL	2
11	37-7320	PRE LOAD SLEEVE	1
12	37-7321	SLOTTED NUT, 2.0 - 12	1
13	5-826	10 TOOTH SPROCKET	1
14	5-831	MASTER LINK	1
15	8-723	BEARING BLOCK	1
16	8-723B	BEARING	2
17	H-0171004	JNYL 3/8- 24 SS	2
18	H-0172951	HCS 3/8"- 24 X 2-1/2" SS FULL THREADED	2
19	H-25379	SETSCREW, KCP, 1/4"-20 X 1/4"	2
20	H-33376	SET SCREW SHAFT COLLAR, 3/4" ID X 9/16 LG	1
21	H-68013	SNAPRING 5/8"	1
22	H-70003	HCS 1/4"-20 X 5/8" SS	1
23	H-70103	HCS 3/8"-16 X 3/4" SS	2
24	H-70105	HCS 3/8"- 16 X 1" SS	4
25	H-70710	HN 1/4"- 20 SS	1
26	H-70712	HN 3/8"-16 SS	2
27	H-70732	HN 3/8"- 24 SS	1
28	H-71013	FW 1/4 ID X 5/8 OD SS	4
29	H-71017	FW 3/8 ID X 7/8 OD SS	6
30	H-71063	LW 1/4" SS	5
31	H-71067	LW 3/8" SS	6
32	H-72949	HCS 3/8"- 24 X 2" SS FULL THREADED	5
33	H-73754	BHSCS 1/4 - 20 X 3/4" SS	4
34	H-81983	5/16" X 1/4" KURL SET SCREW	1
35	H-K1432	3/16" X 1/2" KEY	1
36	M-9381T24	S-HOOK	1
37	T-050B0025	5/16 ID x 1/4" LG BLACK HOSE	1

12" Front Drive

Item	Part No.	Part Description	Qty
1	250-7314	60 TOOTH STEERING SPROCKET	1
2	250-7327	STEERING CHAIN	1
3	250-7328	WIRE GUIDE	1
4	250-7332	STEERING SHAFT	1
5	275-7120	STEERING SHAFT, LOWER	1
6	290-1218	SPACER 7/8" OD. X 3/4" ID X 1/4" LG	1
7	37-7317	TAPERED ROLLER BEARING	2
8	37-7318	BEARING CAP	2
9	37-7319	STEERING SHAFT SEAL	2
10	37-7320	PRE LOAD SLEEVE	1
11	37-7321	SLOTTED NUT, 2.0 - 12	1
12	370-7326	PIVOT PLATE	1
13	5-826	10 TOOTH SPROCKET	1
14	5-831	MASTER LINK	1
15	8-723	BEARING BLOCK	1
16	8-723B	BEARING	2
17	H-0171004	JNYL 3/8- 24 SS	2
18	H-0172951	HCS 3/8"- 24 X 2-1/2" SS FULL THREADED	2
19	H-33376	SET SCREW SHAFT COLLAR, 3/4" ID X 9/16 LG	1
20	H-68013	SNAPRING 5/8"	1
21	H-70003	HCS 1/4"-20 X 3/4" SS	1
22	H-70103	HCS 3/8"-16 X 3/4" SS	2
23	H-70105	HCS 3/8"- 16 X 1" SS	4
24	H-70710	HN 1/4"- 20 SS	1
25	H-70712	HN 3/8"-16 SS	2
26	H-70732	HN 3/8"- 24 SS	1
27	H-71013	FW 1/4 ID X 5/8 OD SS	4
28	H-71017	FW 3/8 ID X 7/8 OD SS	6
29	H-71063	LW 1/4" SS	5
30	H-71067	LW 3/8" SS	6
31	H-72949	HCS 3/8"- 24 X 2" SS FULL THREADED	5
32	H-73754	BHSCS 1/4 - 20 X 3/4" SS	4
33	H-81983	5/16" X 1/4" KURL SET SCREW	1
34	H-K1432	3/16" X 1/2" KEY	1
35	M-9381T24	S-HOOK	1
36	T-050B0025	5/16 ID x 1/4" LG BLACK HOSE	1

Side Broom Left Hand

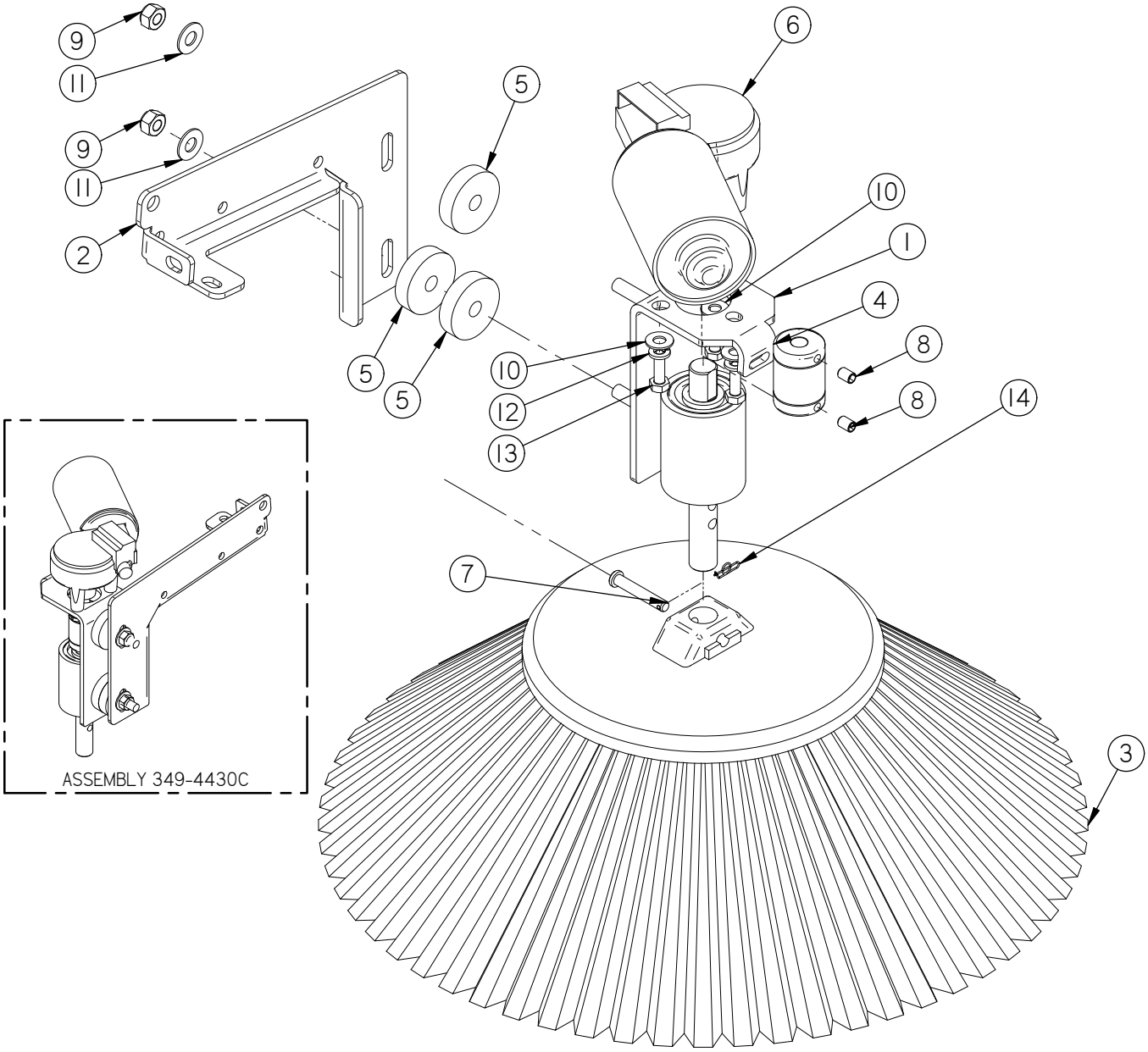

Item	Part No.	Part Description	Qty.
1	290-8750B	MOTOR MOUNT ASSEMBLY	1
2	349-4430	SIDE BROOM LIFT ARM, LH	1
3	4-402	SIDE BROOM POLYPROPYLENE	1
4	4-444	BROOM SAFETY DRIVE CPLG	1
5	4-446	GROMMET-3/8 ID X 1-1/2 OD X .375	3
6	8-220	SIDE BROOM MOTOR	1
7	H-0156730	1/4" X 1 1/2" CLEVIS PIN	1
8	H-25381	1/4"-20 X 3/8" KURL SET SCREW	2
9	H-70861	NYLOK 5/16" - 18 SS	2
10	H-71013	FW 1/4 ID X 5/8 OD SS	3
11	H-71015	FW 5/16 ID X 3/4 OD SS	2
12	H-71063	LW 1/4" SS	3
13	H-M82550	HCS M6-1.0 X 20 SS	3
14	H-RUE8	RUE RING COTTER	1

Side Broom Right Hand

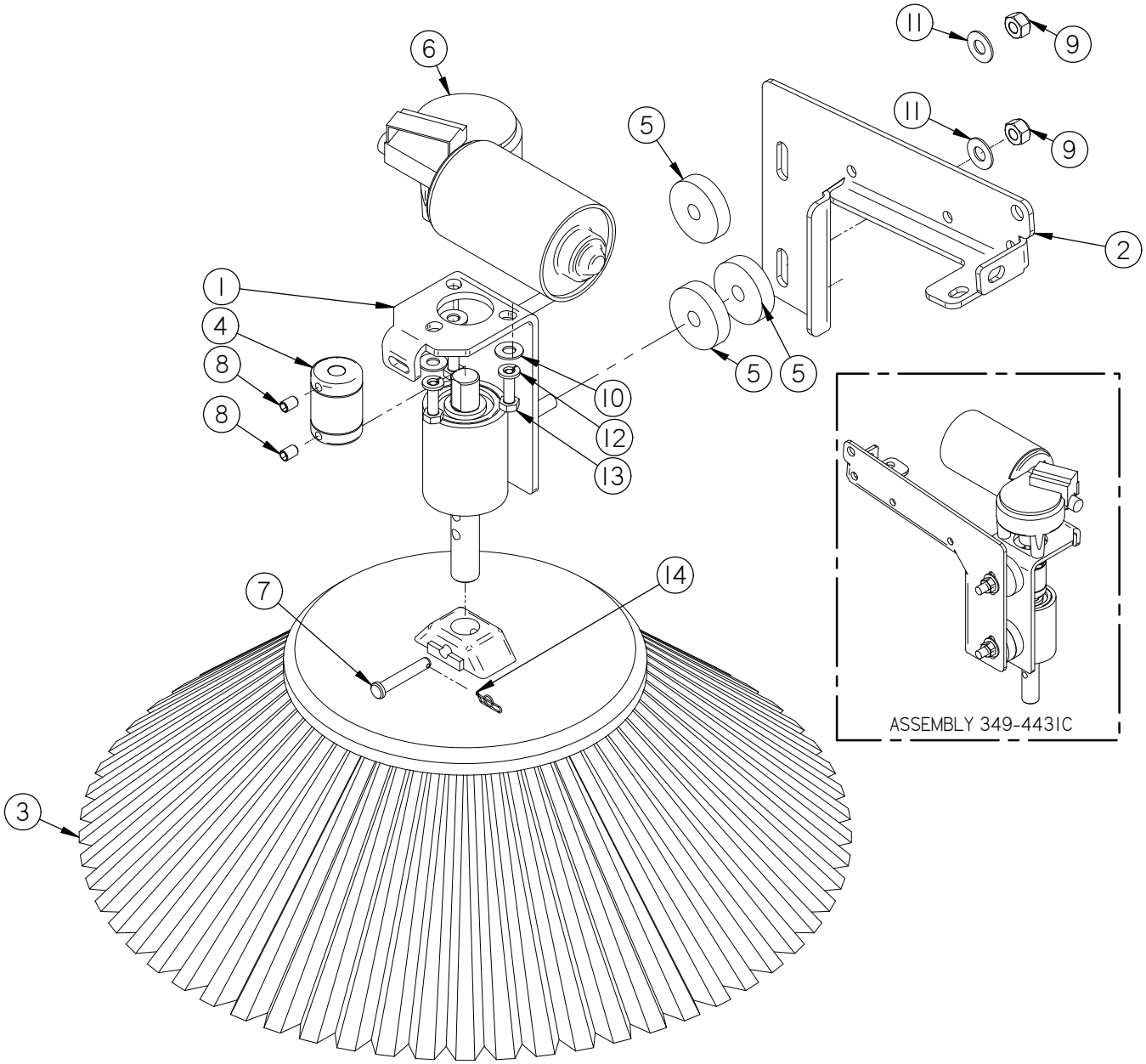

Item	Part No.	Part Description	Qty.
1	290-8750B	MOTOR MOUNT ASSEMBLY	1
2	349-4431	SIDE BROOM LIFT ARM, RH	1
3	4-402	SIDE BROOM POLYPROPYLENE	1
4	4-444	BROOM SAFETY DRIVE CPLG	1
5	4-446	GROMMET-3/8 ID X 1-1/2 OD X .375	3
6	8-220	SIDE BROOM MOTOR	1
7	H-0156730	1/4" X 1 1/2" CLEVIS PIN	1
8	H-25381	1/4"-20 X 3/8" KURL SET SCREW	2
9	H-70861	NYLOK 5/16" - 18 SS	2
10	H-71013	FW 1/4 ID X 5/8 OD SS	3
11	H-71015	FW 5/16 ID X 3/4 OD SS	2
12	H-71063	LW 1/4" SS	3
13	H-M82550	HCS M6-1.0 X 20 SS	3
14	H-RUE8	RUE RING COTTER	1

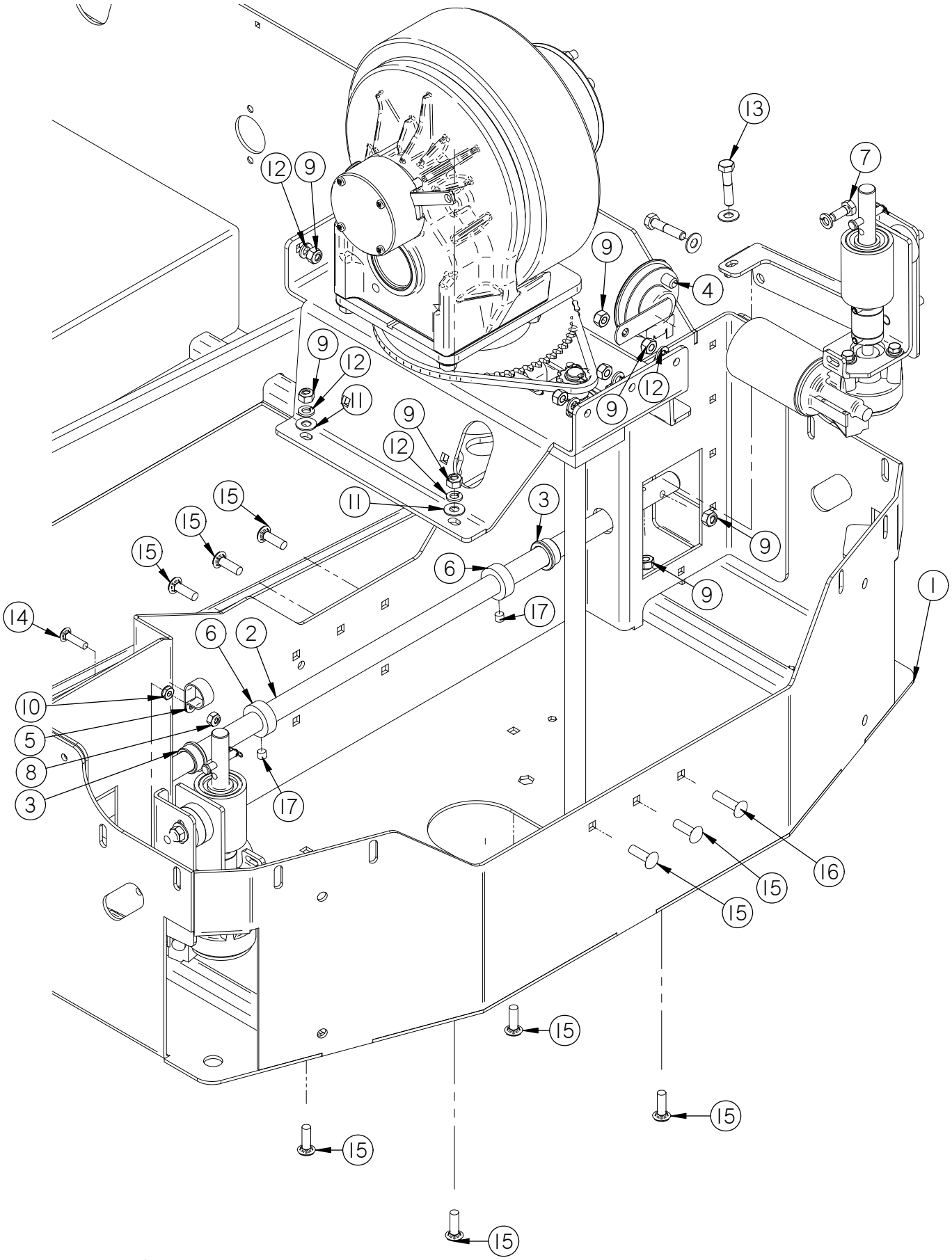
13
7
12
9
9
4
9
12
11
12
9
9
12
11
3
15
15
15
9
6
9
1
14
17
6
2
10
5
8
3
17
16
15
15
15
15
15
15

Item	Part No.	Part Description	Qty.
1	349-1100	MAIN FRAME	1
2	349-4620	SIDE BROOM SUSPENSION AXLE SHAFT	1
3	4-4230	3/4" X 1" X 1/2" FLG BEARING	2
4	8-294	HORN	1
5	H-0127296	LOOP CLAMP, 1.0"	1
6	H-33376	SET SCREW SHAFT COLLAR, 3/4" ID X 9/16 LG	2
7	H-70053	HCS 5/16"- 18 X 3/4" SS	2
8	H-70860	NYLOK 1/4"- 20 SS	1
9	H-70861	NYLOK 5/16" - 18 SS	15
10	H-70925	KN 1/4-20 S/S	1
11	H-71015	FW 5/16 ID X 3/4 OD SS	8
12	H-71065	LW 5/16" SS	12
13	H-71180	HCS 5/16"- 18 X 1-1/2" FULLY THREADED	4
14	H-74420	CB 1/4"- 20 X 1.0" SS	1
15	H-74430	CB 5/16"- 18 X 1" SS	9
16	H-74431	CB 5/16"- 18 X 1-1/4" SS	1
17	H-81983	5/16" X 1/4" KURL SET SCREW	2

Main Broom Driver and Idler Arm

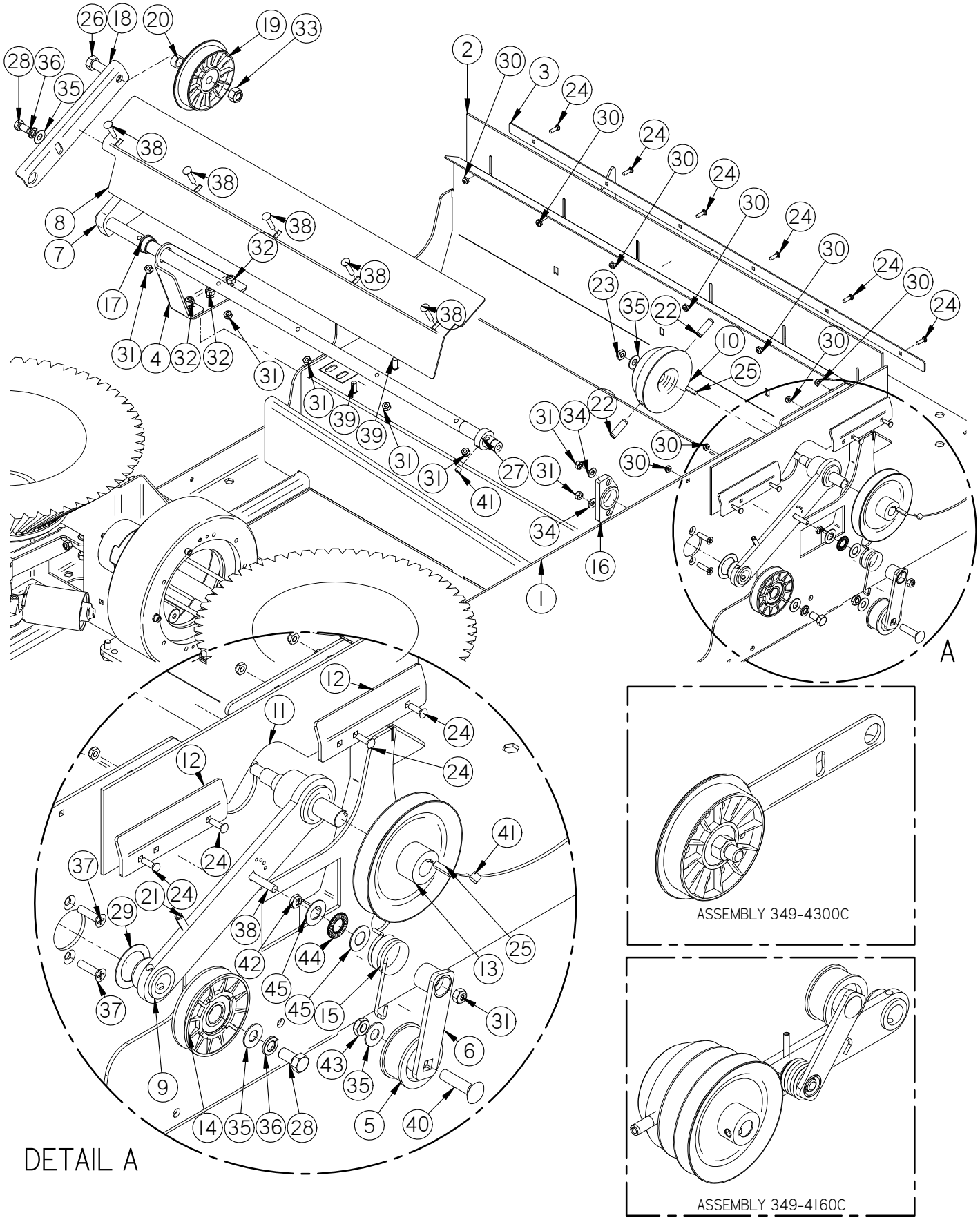

USE THIS PAGE FOR MACINES WITH A SERIAL NUMBER OF 57313 AND HIGHER

Main Broom Driver and Idler Arm

Item	Part No.	Part Description	Qty.
1	349-1100	MAIN FRAME	1
2	349-1165	CURTAIN, REAR WALL	1
3	349-1175	CURTAIN BAND, REAR WALL	1
4	349-1240	MAINBROOM SUPPORT BRACKET	1
5	349-3170	IDLER PULLEY	1
6	349-3600	REVERSE IDLER ARM	1
7	349-4100	MAIN BROOM SUSPENSION ARM	1
8	349-4140	ATTENUATOR	1
9	349-4160A	MAIN BROOM LAT ARM W/BEARING	1
10	349-4200	BROOM DRIVER	1
11	349-5750	RIGHT SIDE CURTAIN	1
12	349-5760	CURTAIN BAND	2
13	4-316	BROOM DRIVE PULLEY	1
14	4-318	IDLER PULLEY	1
15	4-319	TENSION SPRING	1
16	4-421	SUPPORT BLOCK	1
17	4-4230	3/4" X 1" X 1/2" FLG BEARING	1
18	4-430	IDLER ARM	1
19	4-432	IDLER DRUM	1
20	4-432A	IDLER DRUM SPACER	1
21	H-00103	1/4" X 1 1/2" SPRING PIN	1
22	H-00105	3/8" X 1 1/4" SPRING PIN	2
23	H-0171004	JNYL 3/8- 24 SS	1
24	H-0172519	CB #10-32 X 5/8" SS	10
25	H-0953152	3/16" X 3/4" KEY	2
26	H-13211	HCS 1/2"-13 X 2"	1
27	H-33376	SHAFT COLLAR, 3/4" ID X 9/16 LG	1
28	H-70103	HCS 3/8"-16 X 3/4" SS	2
29	H-7042834	SHIM 1.125 ID X 1.625 OD X .030 SS	1
30	H-70858	NYLOK #10-32 SS	10
31	H-70860	NYLOK 1/4"- 20 SS	8
32	H-70861	NYLOK 5/16" - 18 SS	3
33	H-70864	NYLOK 1/2"-13 SS	1
34	H-71013	FW 1/4 ID X 5/8 OD SS	2
35	H-71017	FW 3/8 ID X 7/8 OD SS	4
36	H-71067	LW 3/8" SS	2
37	H-72710	FHP 1/4"- 20 X 1" SS	2
38	H-74421	CB 1/4"- 20 X 1-1/4" SS	6
39	H-74429	CB 5/16"- 18 X 3/4" SS	3
40	H-74438	CB 3/8"- 16 X 1-1/2" SS	1
41	H-81983	5/16" X 1/4" KURL SET SCREW	2
42	H-NJ04C	JNYL 1/4" - 20 SS	1
43	H-NJ06C	JNYL 3/8- 16 SS	1
44	M-5909K31	NEEDLE ROLLER THRUST BEARING	1
45	M-5909K44	NEEDLE ROLLER THRUST BEARING WASHER	2

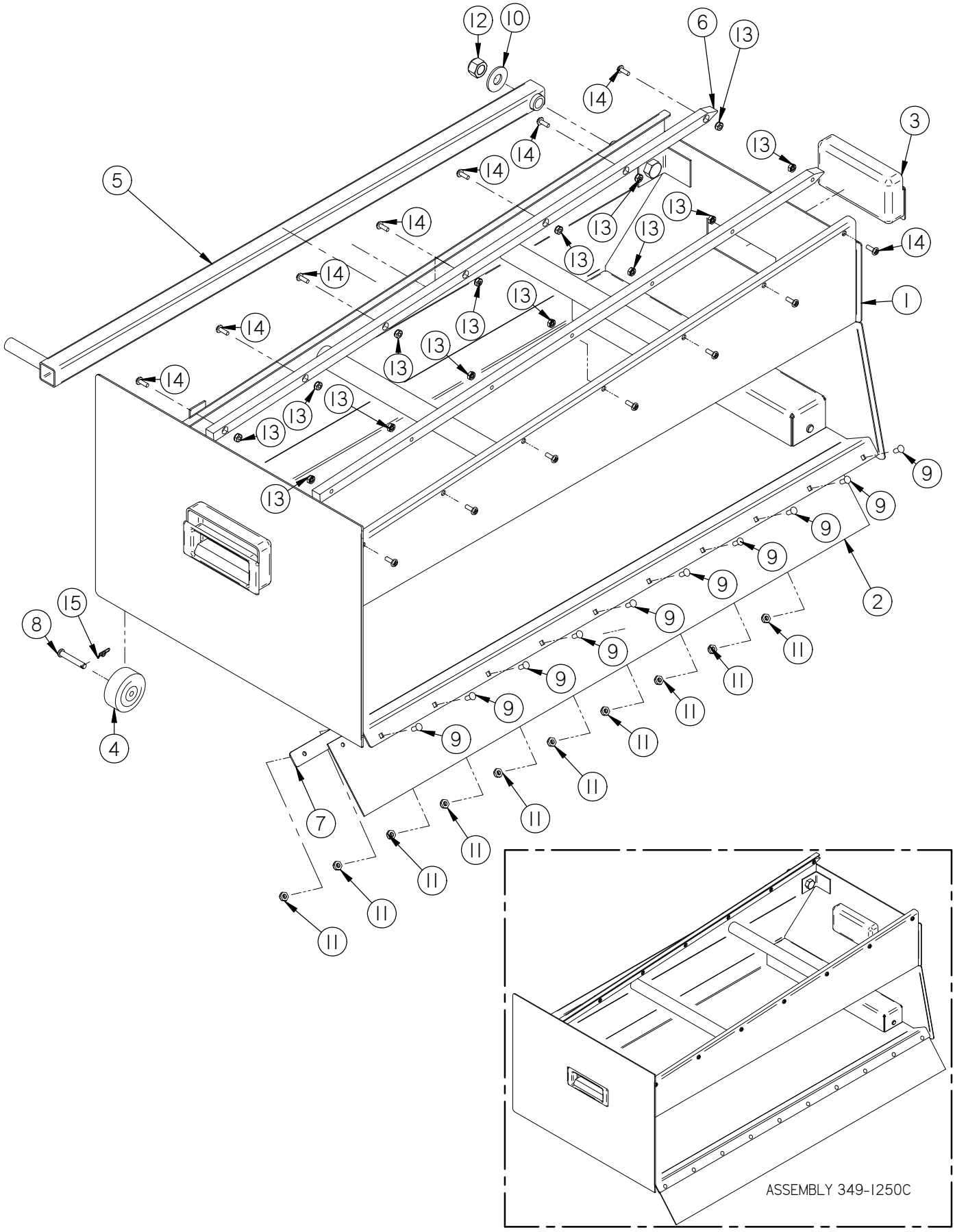
12
10
6
13
14
3
5
1
9
2
15
8
4
7
11
ASSEMBLY 349-1250C

Item	Part No.	Part Description	Qty.
1	349-1250	HOPPER BODY	1
2	349-5710	HOPPER FLAP	1
3	5-849	RECESSED HANDLE	2
4	8-124	HOPPER WHEEL	4
5	8-128	HOPPER HANDLE	1
6	8-163	HDPE SLIDE RAIL	2
7	8-575	HOPPER FLOOR SEAL CLAMP	1
8	H-0156730	1/4" X 1 1/2" CLEVIS PIN	4
9	H-0172518	CB #10-32 X 1/2" SS	10
10	H-50352	FW 17/32" SS	1
11	H-70858	NYLOK #10-32 SS	10
12	H-70864	NYLOK 1/2"-13 SS	1
13	H-70922	KN #8-32	14
14	H-72398	PPH #8-32 X 1/2" S/S	14
15	H-RUE8	RUE RING COTTER	4

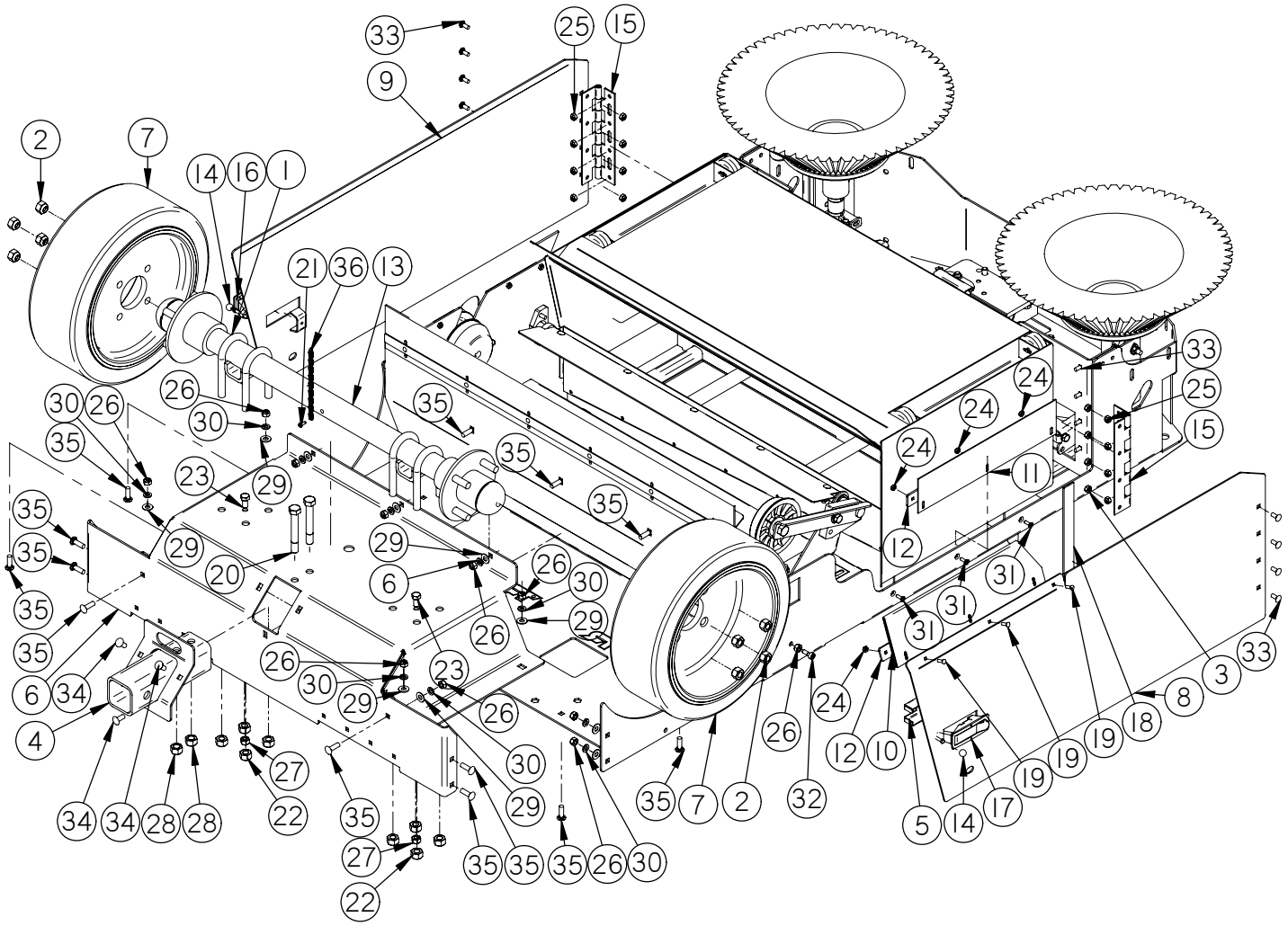
33
25
15
9
2
7
14
16
1
21
36
13
26
30
35
23
29
20
6
34
4
28
27
22
24
11
12
31
3
8
18
19
10
5
17
32
7

Item	Part No.	Part Description	Qty.
1	290-6186	1/2-20 X 1-1/4 " U BOLT	4
2	290-6187	LUG NUT, 1/2"- 20	8
3	349-1100	MAIN FRAME	1
4	349-1190	TRAILER HITCH RECEIVER	1
5	349-1300	LATCH COVER	1
6	349-5000	STRAIGHT AXLE MOUNT	1
7	349-6180	14" REAR WHEEL	2
8	349-9507	LEFT SIDE DOOR	1
9	349-9508	RIGHT SIDE DOOR	1
10	349-9509	LEFT SIDE DOOR CURTAIN	1
11	349-9510	HOPPER SIDE CURTAIN	1
12	349-9515	LEFT CURTAIN BAND	2
13	370-6040	REAR AXLE	1
14	5-100	GROMMET	2
15	5-122	8" SS HINGE	2
16	5-130	DOOR LATCH	1
17	5-130	DOOR LATCH	1
18	8-048	DOOR GASKET	1
19	H-0172519	CB #10-32 X 5/8" SS	4
20	H-13217	HCS 1/2"-13 X 3-1/2" SS	2
21	H-31810	#10-16 X 1/2 DRILL TAP	1
22	H-37130	NYLOK NUT, 1/2"- 20	8
23	H-70103	HCS 3/8"-16 X 3/4" SS	2
24	H-70858	NYLOK #10-32 SS	7
25	H-70860	NYLOK 1/4"- 20 SS	16
26	H-70861	NYLOK 5/16" - 18 SS	18
27	H-70862	NYLOK 3/8"-16 SS	2
28	H-70864	NYLOK 1/2"-13 SS	2
29	H-71015	FW 5/16 ID X 3/4 OD SS	13
30	H-71065	LW 5/16" SS	13
31	H-72683	FHP #10-32 X 5/8" SS	3
32	H-73494	SHCS 5/16-18 X 3/4 SS	2
33	H-74418	CB 1/4"- 20 X 5/8" S/S	16
34	H-74429	CB 5/16"- 18 X 3/4" SS	3
35	H-74430	CB 5/16"- 18 X 1" SS	13
36	T-360824S0800	8" GOLD GROUDING CHAIN	1

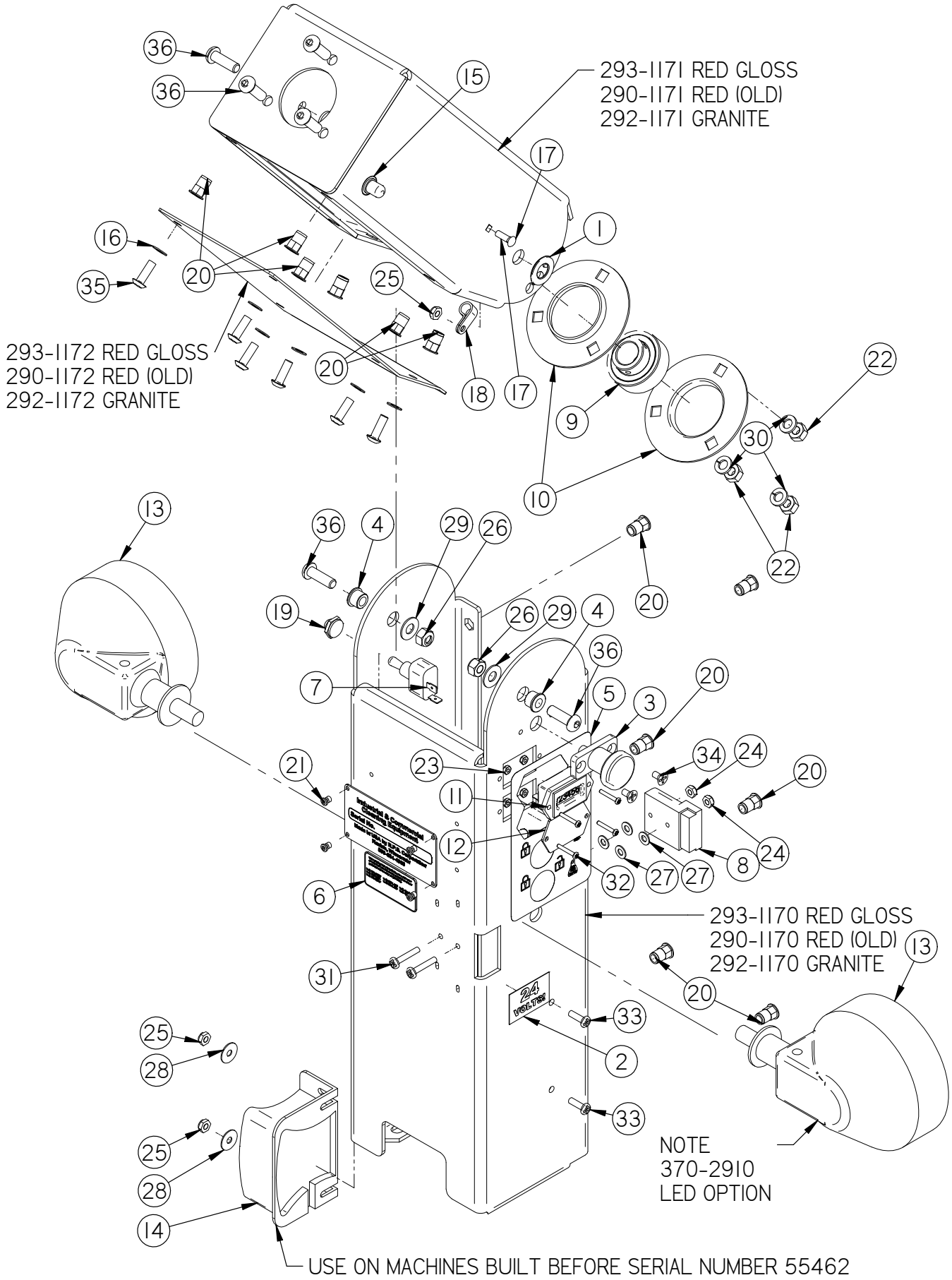
293-1171 RED GLOSS
290-1171 RED (OLD)
292-1171 GRANITE
293-1172 RED GLOSS
290-1172 RED (OLD)
292-1172 GRANITE
293-1170 RED GLOSS
290-1170 RED (OLD)
292-1170 GRANITE
24 VOLTS!
NOTE
370-2910
LED OPTION
USE ON MACHINES BUILT BEFORE SERIAL NUMBER 55462

Item	Part No.	Part Description	Qty.
1	290-1247	BRONZE THRUST BEARING, .50" ID X 1.0" OD X 1/16" TH	2
2	290-1505	24 VOLT STICKER	1
3	290-7050	INDEX PLUNGER	1
4	370-1245	BUSHING	2
5	370-7204	METER STICKER	1
6	370-7206	PATENT PLATE	1
7	370-8920	TOGGLE, ON-OFF SPST	1
8	4-259	CONNECTOR, RED 50, HOUSING ONLY	1
9	4-352	BEARING	1
10	4-364A	FLANGE, 1.75" ID	2
11	8-262	HOUR METER	1
12	8-263	METER PLUG	1
13	8-291	HEADLIGHT	2
14	8-292	BACKUP ALARM	1
15	8-294B	PUSH BUTTON SWITCH, SILVER	1
16	H-00282	FW 1/4" NYLON	6
17	H-0172519	CB #10-32 X 5/8" SS	1
18	H-02239	3/8" NYLON LOOP CLAMP	1
19	H-11200	PROTECTIVE BOOT, TOGGLE SWITCH, (BLACK)	1
20	H-250HCN	HCN 1/4"-20	12
21	H-41007	AB4-3A BLIND RIVET	4
22	H-70711	HN 5/16"- 18 SS	4
23	H-70854	NYLOK #4-40 SS	4
24	H-70856	NYLOK #8-32 SS	2
25	H-70858	NYLOK #10-32 SS	3
26	H-70861	NYLOK 5/16" - 18 SS	2
27	H-71009	FW #10 SS	4
28	H-71010	FW #10 ID X 11/16 OD SS	2
29	H-71015	FW 5/16 ID X 3/4 OD SS	2
30	H-71065	LW 5/16" SS	4
31	H-72418	PPH #8-32 X 1" S/S	2
32	H-72490	PPH #4-40 X 3/4" S/S	4
33	H-72517	PPH #10-32 X 5/8" SS	2
34	H-72681	FHP #10-32 X 3/8" SS	2
35	H-73754	BHSCS 1/4 - 20 X 3/4" SS	6
36	H-73780	BHSCS 5/16-18 X 1	6

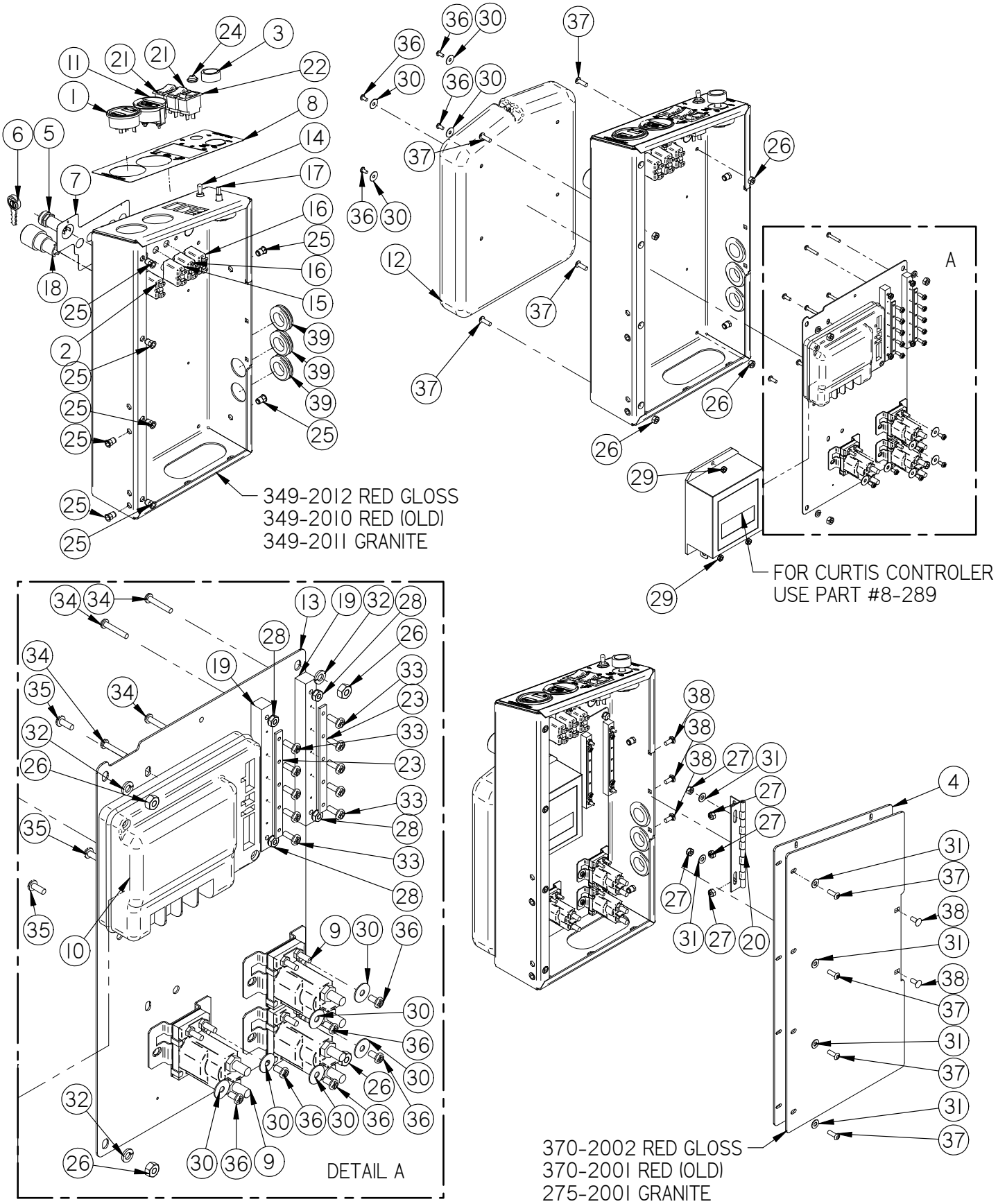
349-2012 RED GLOSS
349-2010 RED (OLD)
349-2011 GRANITE
FOR CURTIS CONTROLER
USE PART #8-289
A
DETAIL A
370-2002 RED GLOSS
370-2001 RED (OLD)
275-2001 GRANITE

Item	Part No.	Part Description	Qty.
1	190-4855	24V BATTERY AND HOUR METER	1
2	190-9609	FUSE, RESETTABLE, 40 AMP	1
3	21-4520	SPEED CONTROL KNOB, RED	1
4	290-2004	ACCESS COVER GASKET	1
5	290-234	KEY SWITCH (WITH KEY)	1
6	290-234A	KEY SET (REPLACE)	1
7	349-1500	CONTROL PANEL STICKER, FRONT	1
8	349-2013	CONTROL PANEL STICKER, TOP	1
9	349-2331	RELAY, 24V, SMALL W/FLAT MTG PLATE	3
10	349-2899	IDRIVE 24V 140 AMP CONTROLLER	1
11	349-4852	BROOM PRESSURE GAUGE, 40 AMP	1
12	370-0002	OPERATORS MANUAL HOLDER	1
13	370-2006	HARDWARE PANEL	1
14	370-8210	SWITCH, TOGGLE, ON/ON (DPDT)	1
15	390-9610	FUSE, RESETTABLE, 10 AMP, 50V DC MAX	2
16	390-9615	FUSE, RESETTABLE, 15 AMP, 50V DC MAX	2
17	4-451	RHEOSTAT, 2.5 AMP	1
18	5-300	EMERGENCY SHUT OFF	1
19	7-287	BUSS BAR UHMW	2
20	8-180	HINGE, 6-7/8" S/S	1
21	8-231	SWITCH, ON-OFF ROCKER SPST	2
22	8-233	OFF-MOM SPST	1
23	E-5HBB	5 HOLE BUSS BAR	2
24	H-11196	PROTECTIVE BOOT, TOGGLE SWITCH, (RED)	1
25	H-250HCN	HCN 1/4"-20	8
26	H-70710	HN 1/4"- 20 SS	8
27	H-70860	NYLOK 1/4"- 20 SS	5
28	H-70922	KN #8-32	4
29	H-70923	KN #10-32 SS	3
30	H-71010	FW #10 ID X 11/16 OD SS	10
31	H-71013	FW 1/4 ID X 5/8 OD SS	6
32	H-71063	LW 1/4" SS	4
33	H-72398	PPH #8-32 X 1/2" S/S	10
34	H-72418	PPH #8-32 X 1" S/S	4
35	H-72515	PPH #10-32 X 1/2" S/S	3
36	H-73742	PPH #10-32 X 3/8" S/S	10
37	H-73754	BHSCS 1/4 - 20 X 3/4" SS	8
38	H-74418	CB 1/4"- 20 X 5/8" S/S	5
39	H-9307K74	GROMMET, 1" ID X 1-3/4" OD BUNA-N	3

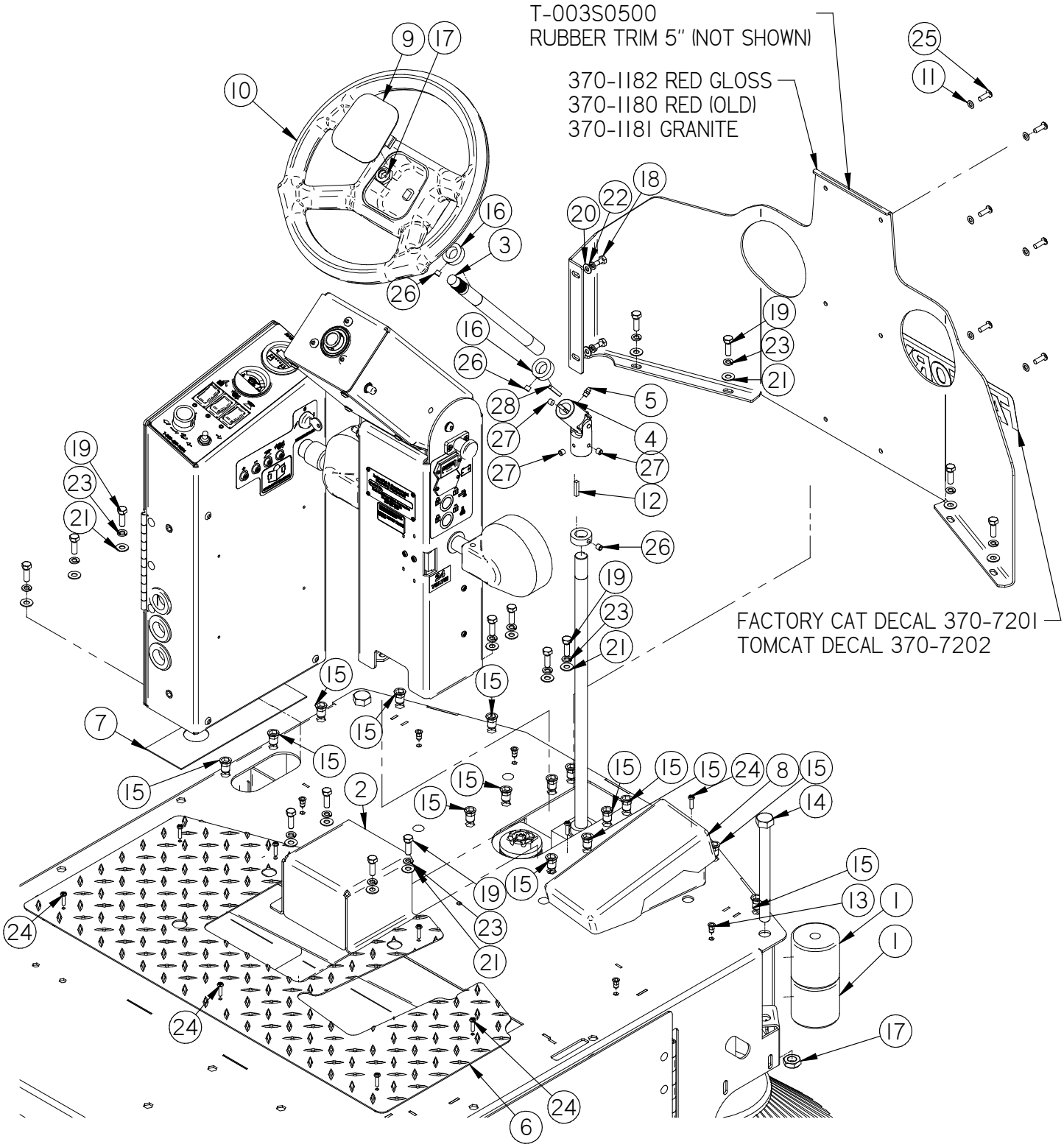
T-003S0500
RUBBER TRIM 5" (NOT SHOWN)
370-1182 RED GLOSS
370-1180 RED (OLD)
370-1181 GRANITE
FACTORY CAT DECAL 370-7201
TOMCAT DECAL 370-7202

Item	Part No.	Part Description	Qty.
1	21-1127	ROLLER	2
2	250-1173	DRIVE COVER	1
3	290-7090	STEERING SHAFT, UPPER	1
4	290-7110	U-JOINT	1
5	290-7111	1/4-28 ZERK FITTING	1
6	370-1610	NON SKID FLOOR PLATE	1
7	370-2004	CENTRAL COMMAND DUST CURTAIN	1
8	8-290	FOOT PEDAL	1
9	8-701A	STEERING COVER	1
10	8-703	STEERING WHEEL	1
11	H-00282	FW 1/4" NYLON	6
12	H-01125	3/16" X 1" KEY	1
13	H-02309	HCN #10-32, LG CRIMP	5
14	H-13327	HB 5/8"- 11 X 7"	2
15	H-312NCNL	HCN 5/16"-18 LG	15
16	H-33376	SET SCREW SHAFT COLLAR, 3/4" ID X 9/16 LG	3
17	H-37038	JNYL 5/8"- 11	2
18	H-70003	HCS 1/4"-20 X 3/4" SS	2
19	H-70055	HCS 5/16"- 18 X 1" SS	15
20	H-71013	FW 1/4 ID X 5/8 OD SS	2
21	H-71015	FW 5/16 ID X 3/4 OD SS	15
22	H-71063	LW 1/4" SS	2
23	H-71065	LW 5/16" SS	15
24	H-72534	PPH #10-32 X 3/4" S/S	9
25	H-73754	BHSCS 1/4 - 20 X 3/4" SS	6
26	H-81983	5/16" X 1/4" KURL SET SCREW	3
27	H-82022	5/16-24" X 1/4" KURL SET SCREW	3
28	H-K14320	3/16" X 1 1/4" KEY	1

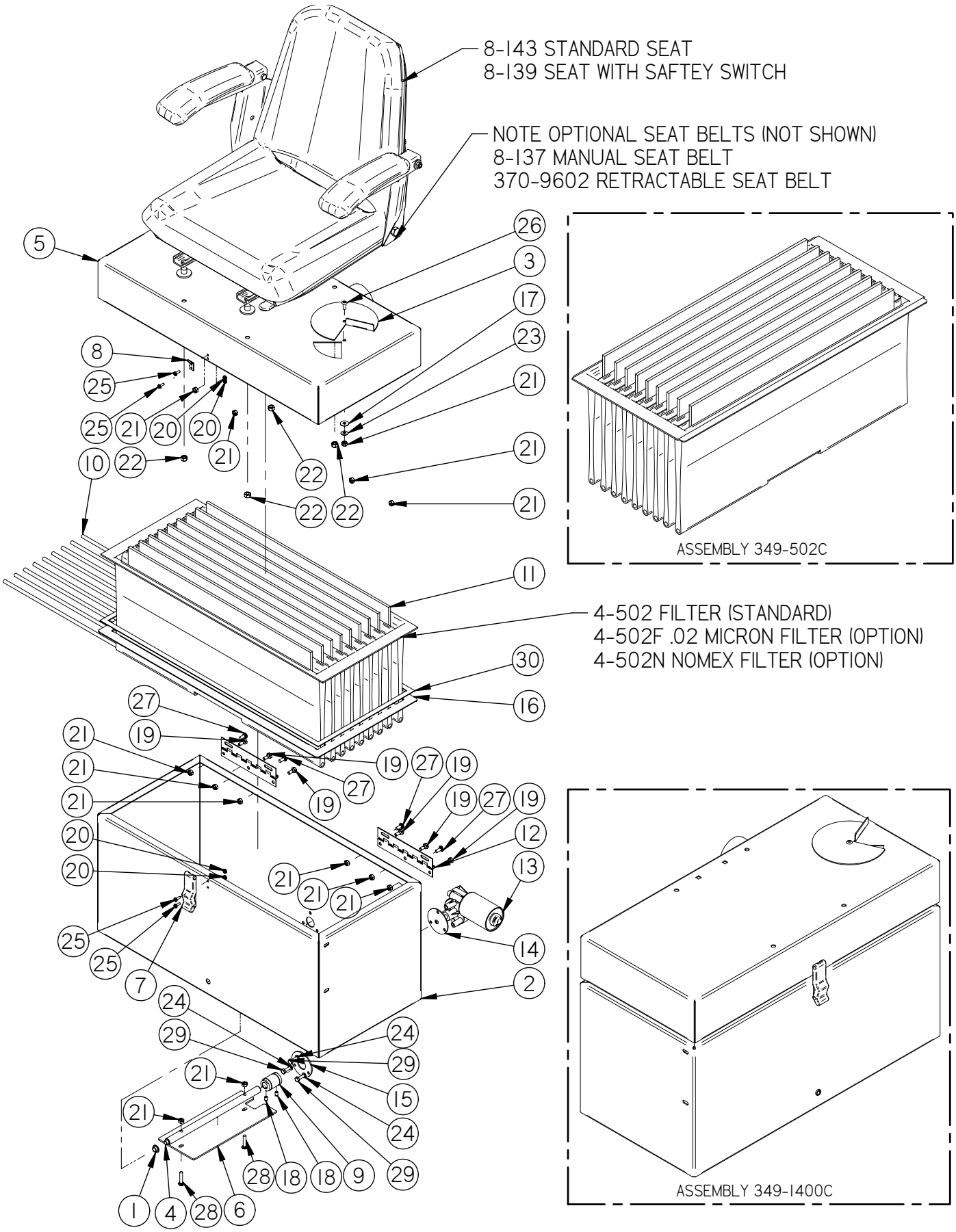
8-143 STANDARD SEAT
8-139 SEAT WITH SAFTEY SWITCH
NOTE OPTIONAL SEAT BELTS (NOT SHOWN)
8-137 MANUAL SEAT BELT
370-9602 RETRACTABLE SEAT BELT
ASSEMBLY 349-502C
4-502 FILTER (STANDARD)
4-502F .02 MICRON FILTER (OPTION)
4-502N NOMEX FILTER (OPTION)
ASSEMBLY 349-1400C

Item	Part No.	Part Description	Qty.
1	290-1233	3/8" ID, 1/2" OD, 1/4" LG BEARING	1
2	349-1400	FILTER CHAMBER	1
3	349-1405	FILTER CHAMBER VENT LID	1
4	349-4450	FILTER SHAKER SHAFT	1
5	349-9524	FILTER HOOD	1
6	349-9549	FILTER BEATER BAR PLATE	1
7	4-124	LATCH	1
8	4-124	CLIP, LATCH	1
9	4-444	BROOM SAFETY DRIVE CPLG	1
10	4-503A	FILTER WEIGHT ROD	9
11	4-521A	FILTER SEPARATOR	9
12	8-180	HINGE, 6-7/8" S/S	2
13	8-221	24 VOLT/100 RPM MOTOR	1
14	8-222	MOTOR GASKET	1
15	8-223	GASKET BACKING PLATE	1
16	8-505	FILTER FRAME	1
17	H-02739	FW, 17/32" ID X 3/4" OD X 1/16" TH, TEFLON	1
18	H-25381	1/4"-20 X 3/8" KURL SET SCREW	2
19	H-70002	HCS 1/4"-20 X 5/8" SS	6
20	H-70856	NYLOK #8-32 SS	4
21	H-70860	NYLOK 1/4"- 20 SS	13
22	H-70861	NYLOK 5/16" - 18 SS	4
23	H-71013	FW 1/4 ID X 5/8 OD SS	1
24	H-71063	LW 1/4" SS	3
25	H-72398	PPH #8-32 X 1/2" S/S	4
26	H-73753	BHSCS 1/4 - 20 X 5/8" SS	1
27	H-74418	CB 1/4"- 20 X 5/8" S/S	4
28	H-74421	CB 1/4"- 20 X 1-1/4" SS	2
29	H-M82550	HCS M6-1.0 X 20 SS	3
30	T-00257600	1/2" DBL SIDED TAPE	1

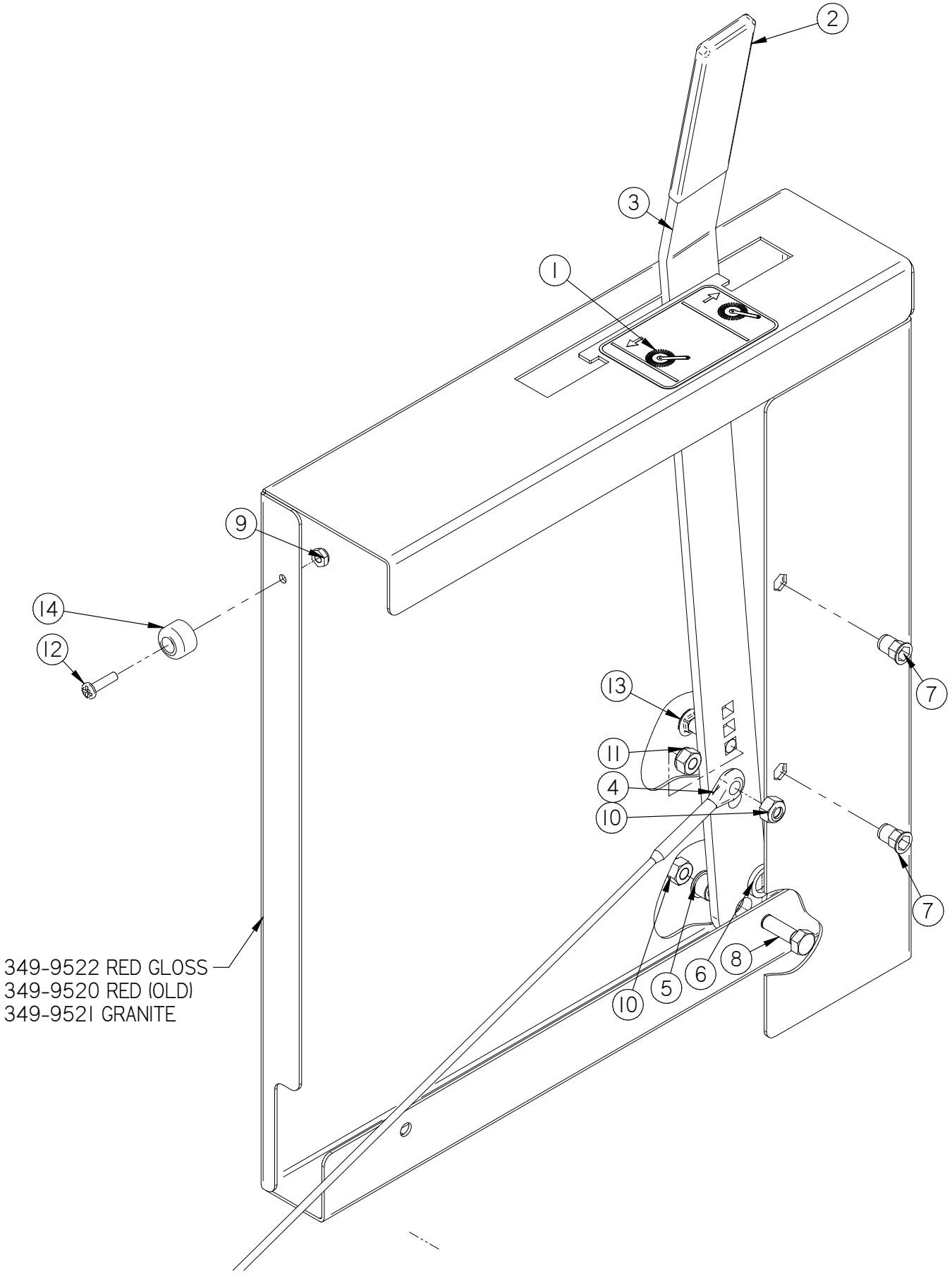
2
3
1
9
14
12
13
11
4
10
7
7
8
6
5
10
349-9522 RED GLOSS
349-9520 RED (OLD)
349-9521 GRANITE

Item	Part No.	Part Description	Qty.
1	349-1501	MAIN BROOM STICKER	1
2	349-4480	LIFT ARM GRIP	1
3	349-4510	MAIN BROOM LIFT LEVER	1
4	349-7890	SIDE BROOM CABLE	1
5	370-1245	BUSHING	1
6	H-01320	FW 1/2" ID X 1/8" THICK NYLON	1
7	H-250HCN	HCN 1/4"-20	2
8	H-70055	HCS 5/16"- 18 X 1" SS	1
9	H-70858	NYLOK #10-32 SS	1
10	H-70861	NYLOK 5/16" - 18 SS	2
11	H-70926	KN 15/16-18 S/S	1
12	H-72534	PPH #10-32 X 3/4" S/S	1
13	H-74431	CB 5/16"- 18 X 1-1/4" SS	1
14	H-9540	RUBBER BUMPER, 25/32"	1

Side Broom Panel

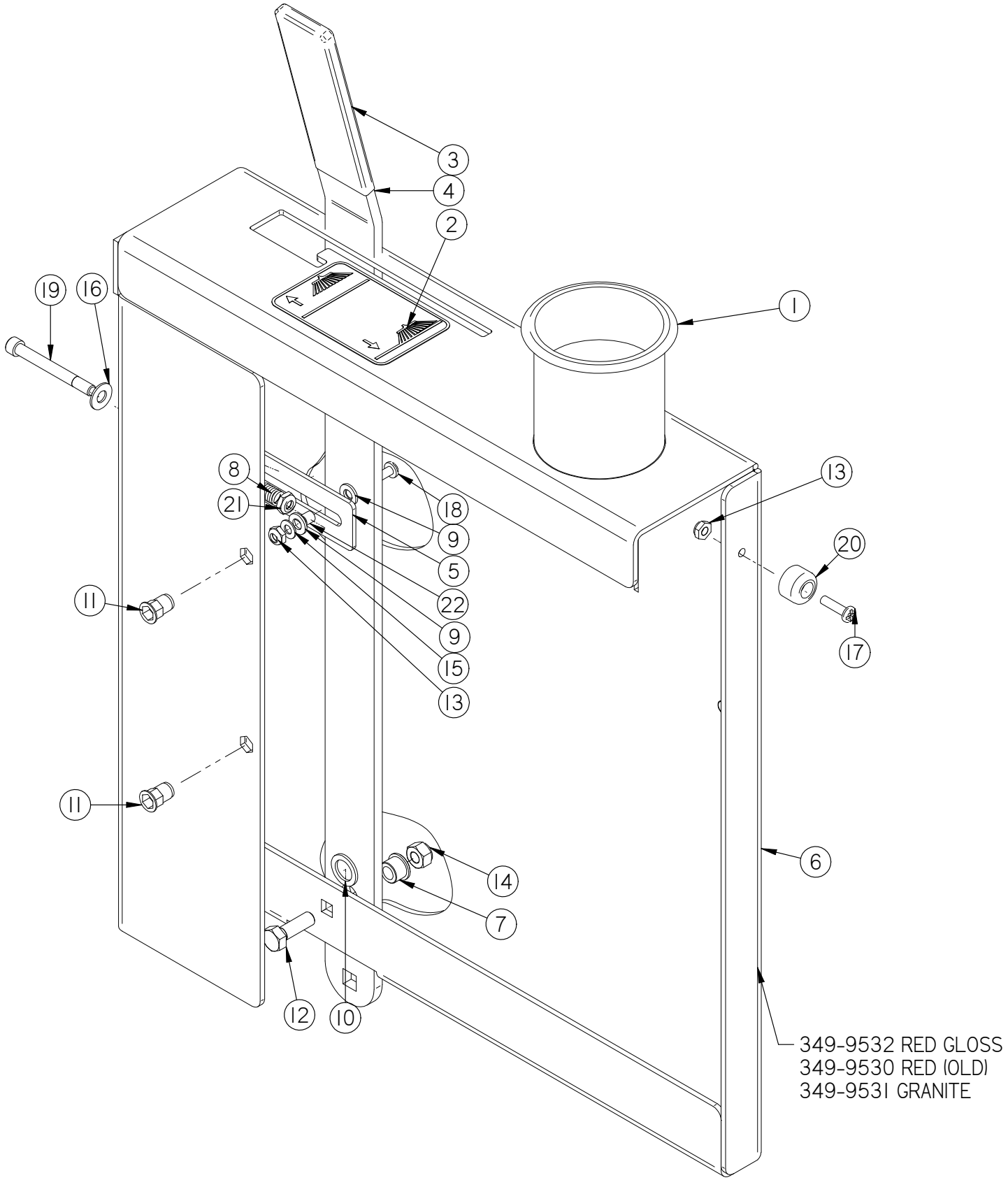

Side Broom Panel

Item	Part No.	Part Description	Qty.
1	349-0014	CUP HOLDER	1
2	349-1502	SIDE BROOM STICKER	1
3	349-4480	LIFT ARM GRIP	1
4	349-4610	LEVER, SIDE BROOM	1
5	349-4650	SIDE BROOM ADJ. PLATE	1
6	349-9530	SIDE BROOM LIFT LEVER PANEL	1
7	370-1245	BUSHING	1
8	8-466	SPRING	1
9	H-00283	FW 1/4" NYLON	2
10	H-05337	FW 1/2" ID X 1/16" THICK NYLON	1
11	H-250HCN	HCN 1/4"-20	2
12	H-70055	HCS 5/16"- 18 X 1" SS	1
13	H-70858	NYLOK #10-32 SS	2
14	H-70861	NYLOK 5/16" - 18 SS	1
15	H-71009	FW #10 SS	1
16	H-71013	FW 1/4 ID X 5/8 OD SS	1
17	H-72534	PPH #10-32 X 3/4" S/S	1
18	H-72536	PPH #10-32 X 1" S/S	1
19	H-73467	SHCS 1/4-20 X 2.25 SS	1
20	H-9540	RUBBER BUMPER, 25/32"	1
21	H-NJ04C	JNYL 1/4" - 20 SS	1
22	M-6391K122	.25 OD X .1875 ID X .25 LG SLEEVE	1

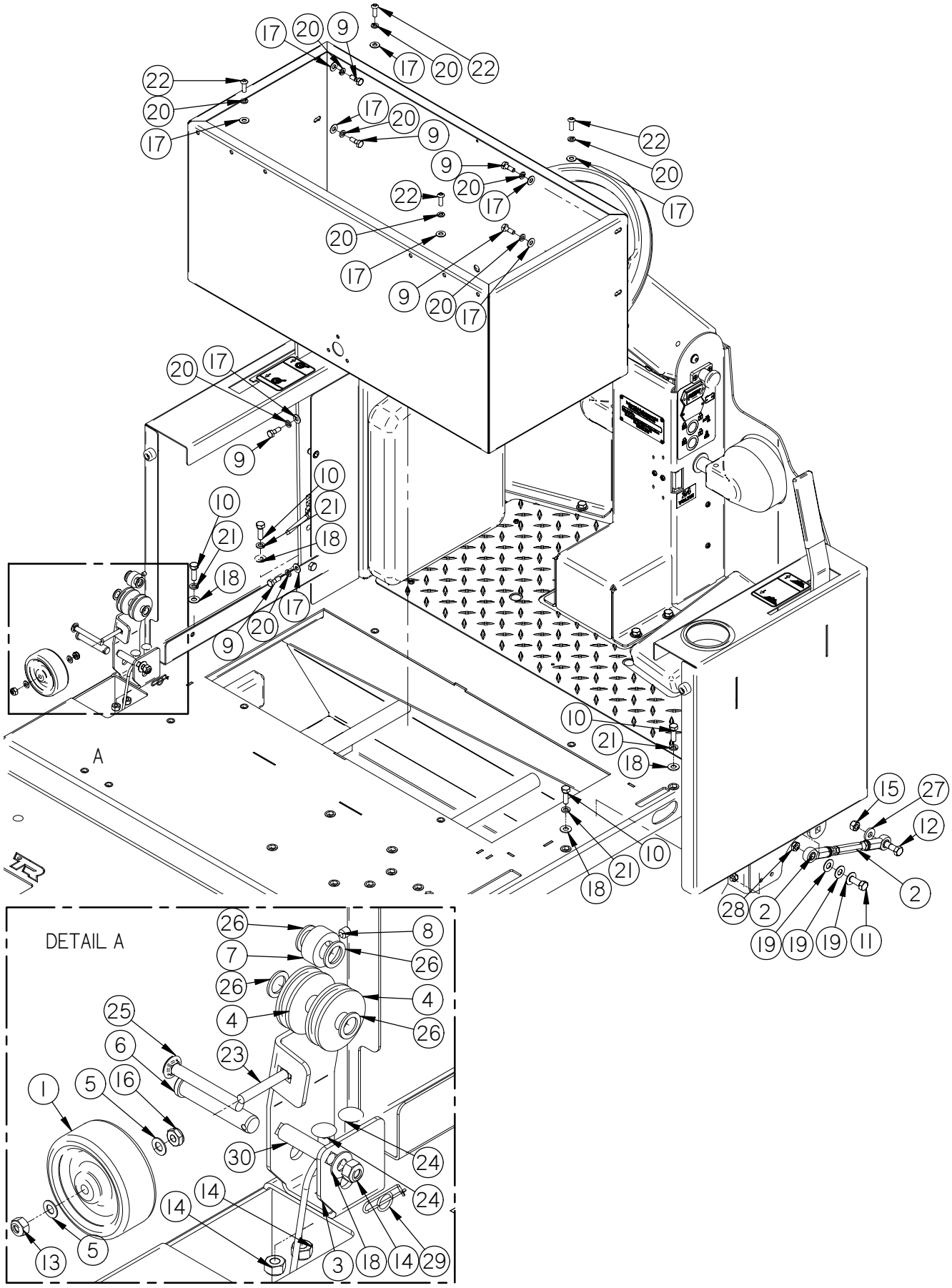
DETAIL A
A

Item	Part No.	Part Description	Qty.
1	21-7600	SIDE WHEEL (GREY)	1
2	253-8440	ADJUSTABLE LATERAL ARM	1
3	349-1140	MAINBROOM PULLEY BRACKET	1
4	349-7721	PULLEY, NYLON	2
5	H-00282	FW 1/4" NYLON	2
6	H-0156773	CLEVIS PIN, 1/2" X 2-1/2"	1
7	H-03660	.1/2" ID X 7/16" LG SETSCREW SHAFT COLLAR	1
8	H-25379	SETSCREW, KCP, 1/4"-20 X 1/4"	1
9	H-70003	HCS 1/4"-20 X 3/4" SS	6
10	H-70055	HCS 5/16"- 18 X 1" SS	4
11	H-70105	HCS 3/8"- 16 X 1" SS	1
12	H-70109	HCS 3/8"- 16 X 1-1/2" SS	1
13	H-70860	NYLOK 1/4"- 20 SS	1
14	H-70861	NYLOK 5/16" - 18 SS	3
15	H-70862	NYLOK 3/8"-16 SS	1
16	H-70925	KN 1/4-20 S/S	1
17	H-71013	FW 1/4 ID X 5/8 OD SS	10
18	H-71015	FW 5/16 ID X 3/4 OD SS	5
19	H-71017	FW 3/8 ID X 7/8 OD SS	3
20	H-71063	LW 1/4" SS	10
21	H-71065	LW 5/16" SS	4
22	H-73754	BHSCS 1/4 - 20 X 3/4" SS	4
23	H-74396	CB 1/4"- 20 X 1-3/4" SS	1
24	H-74429	CB 5/16"- 18 X 3/4" SS	2
25	H-74434	CB 5/16"- 18 X 2.5" SS	1
26	H-76065	FW 1/2" NYLON	4
27	H-98025	FW 3/8" GRADE 8	1
28	H-NJ06C	JNYL 3/8- 16 SS	1
29	H-RUE22	1/2" RUE RING COTTER	1
30	T-031B0175	CABLE GUIDE	1

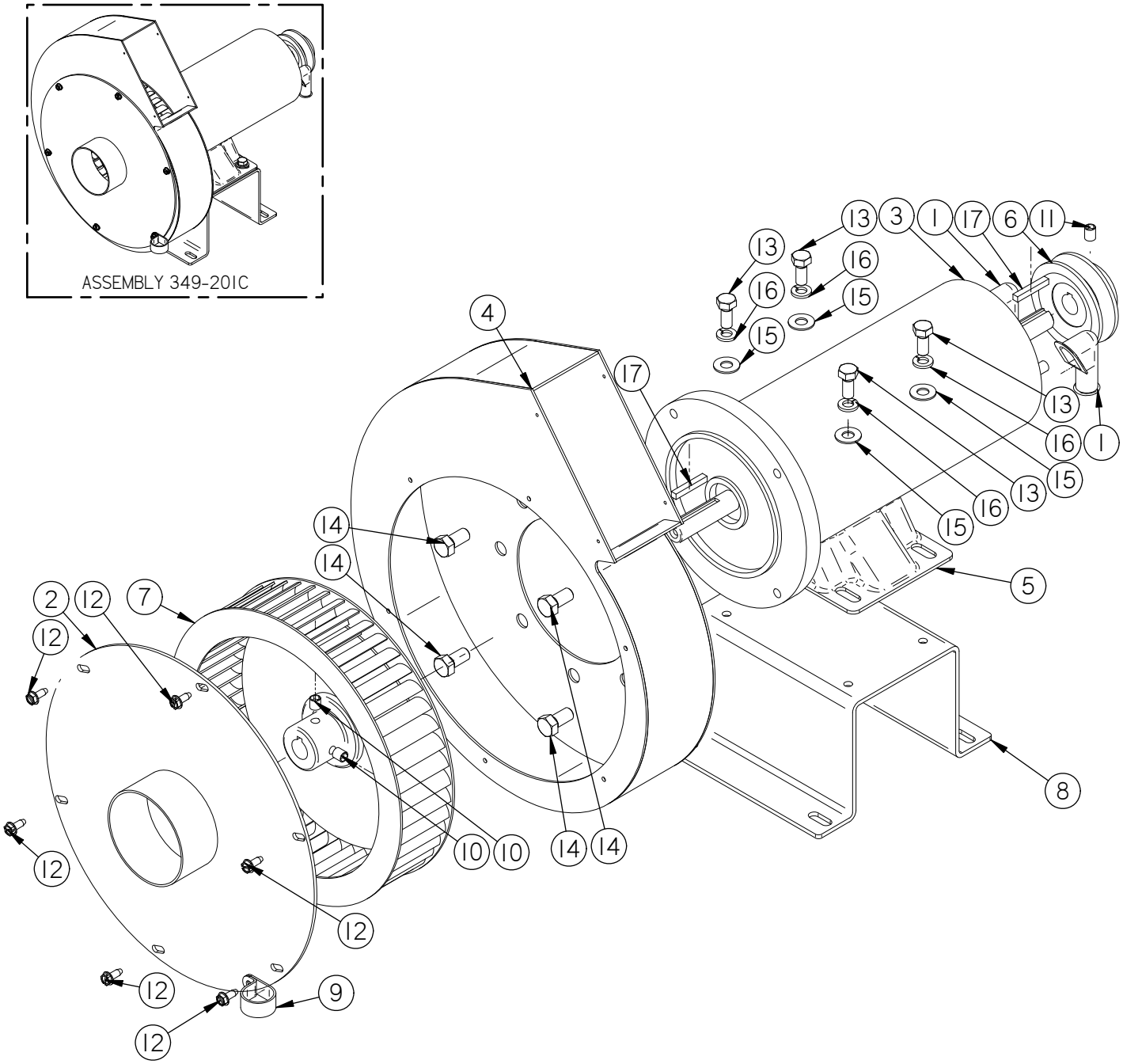
ASSEMBLY 349-201C
13
3
1
17
6
11
16
15
4
5
2
12
7
14
10
9
8

Main Broom Motor

Item	Part No.	Part Description	Qty.
1	290-2780	TERMINAL BOOT, BLACK	2
2	290-9523	BLOWER DOOR PLATE	1
3	349-201	24V 2000 RPM,TWIN SHAFT MOTOR	1
4	349-5110	BLOWER HOUSING	1
5	4-201B	MOTOR CRADLE	1
6	4-301	MAIN DRIVE PULLEY	1
7	4-512	BLOWER WHEEL	1
8	8-165	MOTOR SUPPORT BRACKET	1
9	H-0127296	LOOP CLAMP, 1.0"	1
10	H-25484	5/16" X 5/16" KURL SET SCREW	2
11	H-25485	5/16" X 3/8" KURL SET SCREW	1
12	H-31810	HW #10 X 1/2	6
13	H-70053	HCS 5/16"- 18 X 3/4" SS	4
14	H-70103	HCS 3/8"-16 X 3/4" SS	4
15	H-71015	FW 5/16 ID X 3/4 OD SS	4
16	H-71065	LW 5/16" SS	4
17	H-K14320	3/16" X 1 1/4" KEY	2

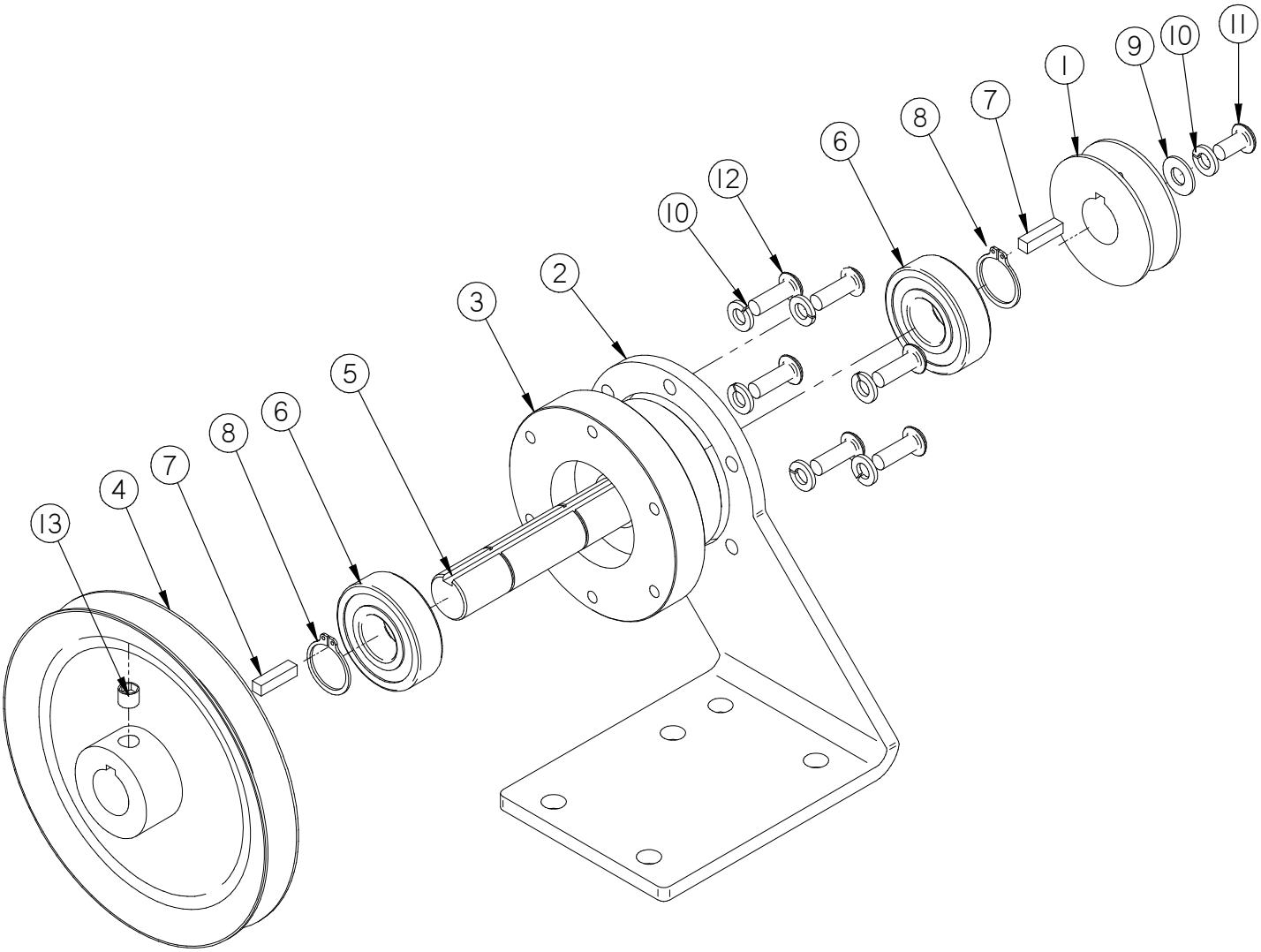
1
2
3
4
5
6
7
8
9
10
11
12
13

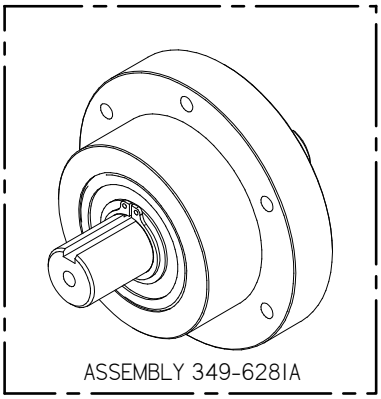
ASSEMBLY 349-6281A

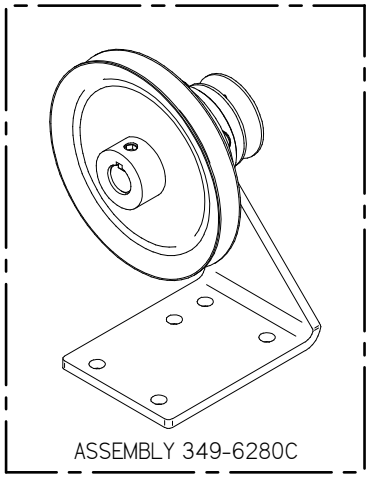
ASSEMBLY 349-6280C

Item	Part No.	Part Description	Qty.
1	349-3200	BROOM DRIVE PULLEY	1
2	349-6280	JACKSHAFT PLATE	1
3	349-6281	JACKSHAFT COLLAR	1
4	4-312	TRANS INPUT PULLEY	1
5	8-641	JACKSHAFT SHAFT	1
6	8-723B	BEARING	2
7	H-0953152	3/16" X 3/4" KEY	2
8	H-68015	SNAPRING 3/4"	2
9	H-71013	FW 1/4 ID X 5/8 OD SS	1
10	H-71063	LW 1/4" SS	7
11	H-73752	BHSCS 1/4 - 20 X 1/2" SS	1
12	H-73754	BHSCS 1/4 - 20 X 3/4" SS	6
13	H-81983	5/16" X 1/4" KURL SET SCREW	1

Main Broom Motor and Jackshaft

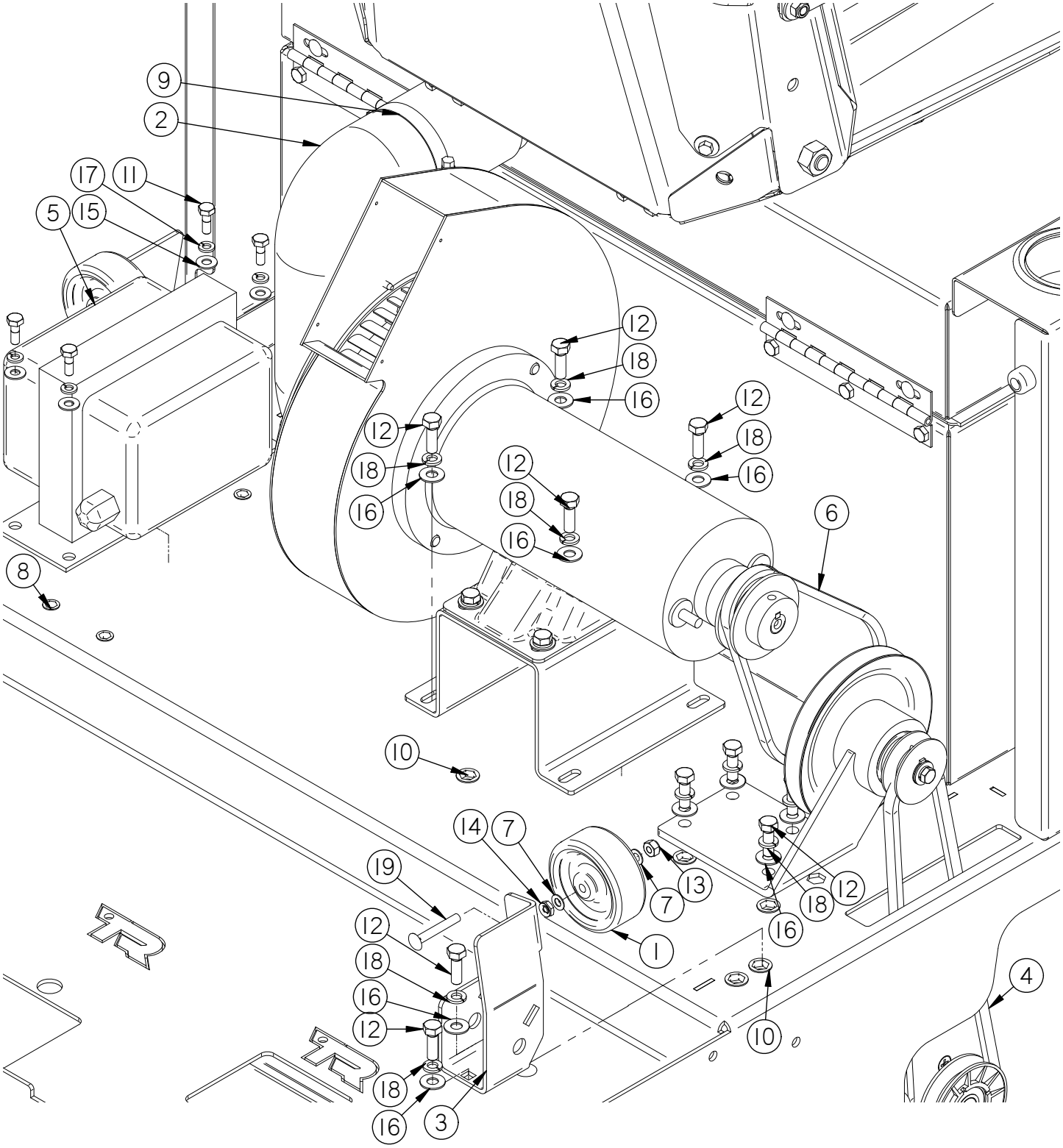

Item	Part No.	Part Description	Qty.
1	21-7600	SIDE WHEEL (GREY)	1
2	349-0020	3 INCH ID X 20 INCH LG. VAC HOSE	1
3	349-1140	MAINBROOM PULLEY BRACKET	1
4	349-3020	MAIN BROOM BELT	1
5	8-244	BATTERY CHARGER, ON-BOARD, 25 AMP, 110V	1
6	8-301	MOTOR TO JACK SHAFT BELT	1
7	H-00282	FW 1/4" NYLON	2
8	H-00918	HCN 1/4"-20 LG	3
9	H-0427619	CLAMP 2" - 3"	1
10	H-312NCNL	HCN 5/16"-18 LG	8
11	H-70003	HCS 1/4"-20 X 3/4" SS	4
12	H-70055	HCS 5/16"- 18 X 1" SS	10
13	H-70860	NYLOK 1/4"- 20 SS	1
14	H-70925	KN 1/4-20 S/S	1
15	H-71013	FW 1/4 ID X 5/8 OD SS	4
16	H-71015	FW 5/16 ID X 3/4 OD SS	10
17	H-71063	LW 1/4" SS	4
18	H-71065	LW 5/16" SS	10
19	H-74396	CB 1/4"- 20 X 1-3/4" SS	1

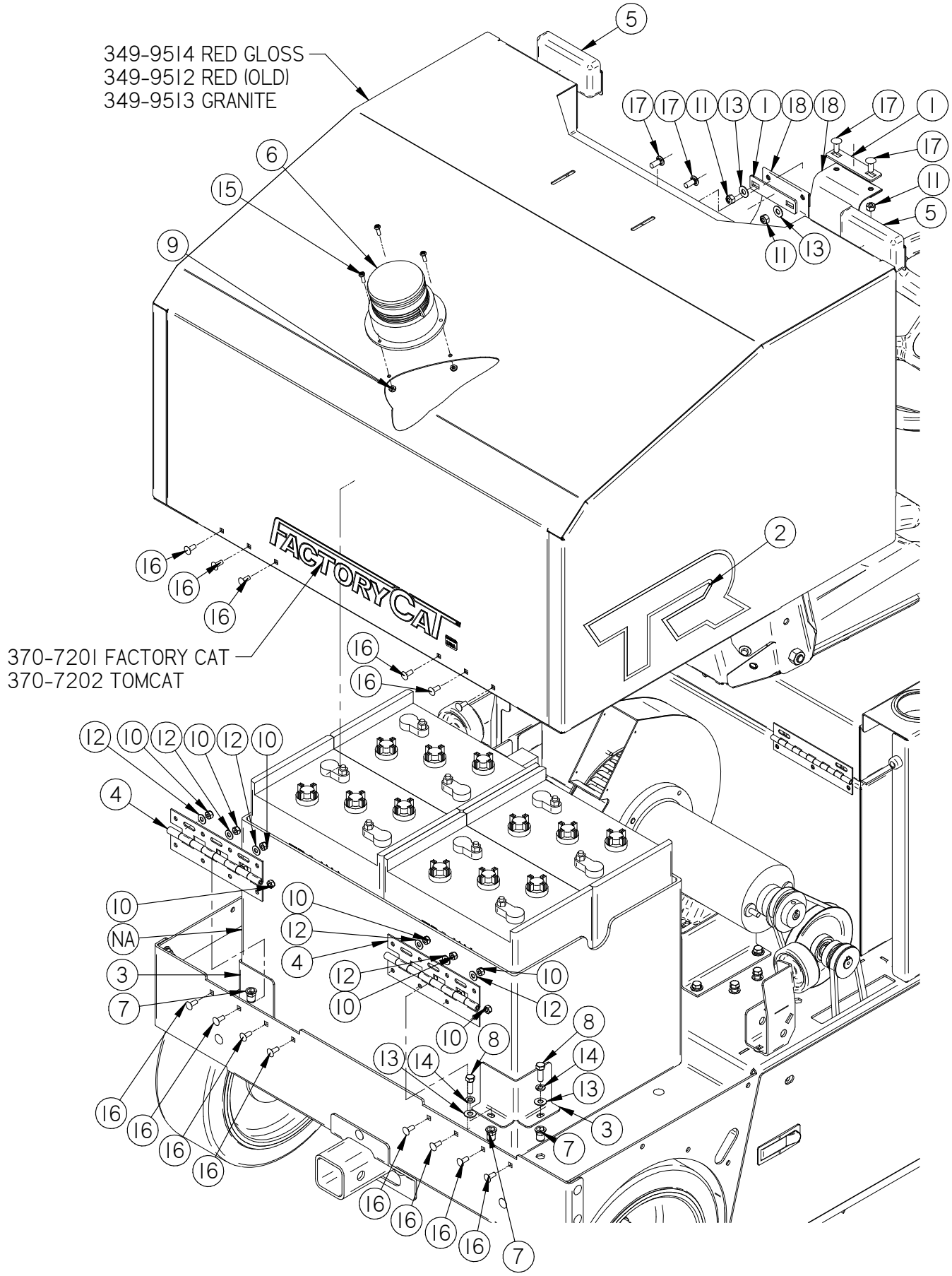
349-9514 RED GLOSS
349-9512 RED (OLD)
349-9513 GRANITE
370-7201 FACTORY CAT
370-7202 TOMCAT
FACTORY CAT
TR
5
17
17
11
13
1
18
18
17
1
17
11
5
11
13
6
15
9
2
16
16
16
16
16
12
10
12
10
12
10
4
10
NA
3
7
10
12
4
12
10
10
12
10
8
8
14
13
14
13
3
7
16
16
16
16
16
16
16
16
7

Item	Part No.	Part Description	Qty.
1	253-1040	TANK STRAP SUPPORT	2
2	349-2005	TR STICKER	2
3	390-1490	BATTERY BRACKET	2
4	5-122	8" SS HINGE	2
5	5-849	RECESSED HANDLE	2
6	8-293	STROBE LIGHT	1
7	H-312NCNL	HCN 5/16"-18 LG	7
8	H-70055	HCS 5/16"- 18 X 1" SS	4
9	H-70858	NYLOK #10-32 SS	3
10	H-70860	NYLOK 1/4"- 20 SS	12
11	H-70861	NYLOK 5/16" - 18 SS	3
12	H-71013	FW 1/4 ID X 5/8 OD SS	6
13	H-71015	FW 5/16 ID X 3/4 OD SS	6
14	H-71065	LW 5/16" SS	4
15	H-72517	PPH #10-32 X 5/8" SS	3
16	H-74418	CB 1/4"- 20 X 5/8" S/S	14
17	H-74429	CB 5/16"- 18 X 3/4" SS	4
18	T-39072653900	HOOD STRAP, 39" LG X 4" WIDE	1

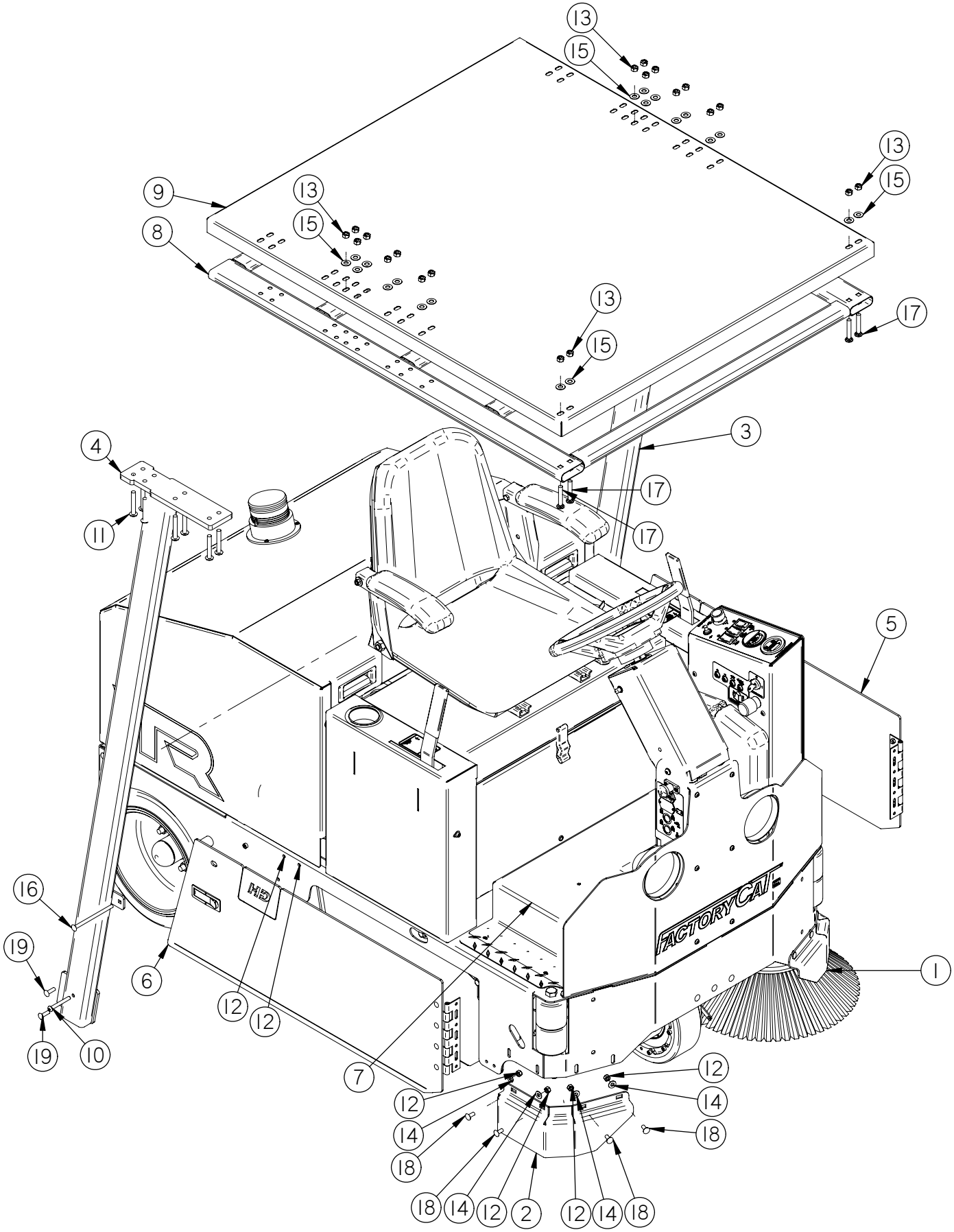
13
15
13
15
9
13
15
8
13
15
17
3
4
17
11
17
5
16
19
6
12
12
19
10
7
12
12
14
14
18
18
18
14
12
2
12
14
18
1
FACTORYCAT

Item	Part No.	Part Description	Qty.
1	349-1115	FRONT GUARD - LH	1
2	349-1116	FRONT GUARD - RH	1
3	349-1701	TR OVERHEAD GUARD SUPPORT (LH)	1
4	349-1702	TR OVERHEAD GUARD SUPPORT (RH)	1
5	349-9505	LEFT SIDE HD DOOR	1
6	349-9506	RIGHT SIDE HD DOOR	1
7	370-1611	RAISED FLOOR	1
8	370-1703	ROOF SUPPORT	1
9	370-1704	OVERHEAD GUARD ROOF	1
10	H-0171292	BHSCS 5/16-18 X 2.5	2
11	H-0171297	BHSCS 3/8"- 16 X 2-1/2" S/S	16
12	H-70861	NYLOK 5/16" - 18 SS	14
13	H-70862	NYLOK 3/8"-16 SS	20
14	H-71015	FW 5/16 ID X 3/4 OD SS	8
15	H-71017	FW 3/8 ID X 7/8 OD SS	20
16	H-74404	CB 5/16"- 18 X 5.0" SS	2
17	H-74416	CB 3/8"- 16 X 2-1/4" SS	4
18	H-74429	CB 5/16"- 18 X 3/4" SS	8
19	H-74430	CB 5/16"- 18 X 1" SS	4

Blower Suction Box

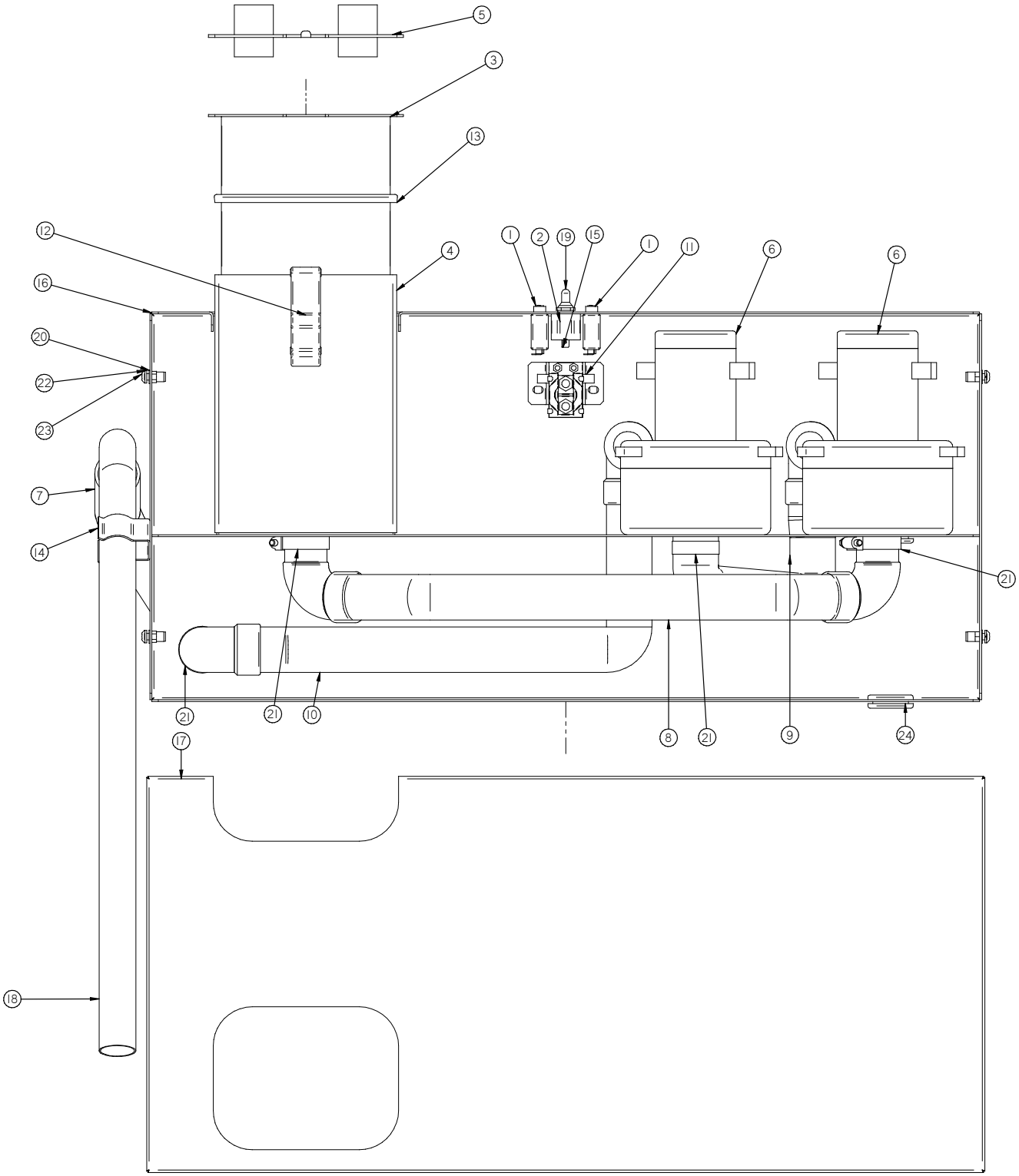

Item	Part No.	Part Description	Qty.	Item	Part No.	Part Description	Qty.
1	190-8370	FUSE RESETTABLE 25 AMP	2	13	5-845A	WINDLACING (WEATHER STRIP)	1
2	200-1011	SWITCHBOARD INSULATOR	1	14	5-886	WAND CLIP	1
3	255-1102	FILTER BAG	1	15	5-892	TOGGLE, ON-OFF SPST	1
4	255-1105	VAC BOX	1	16	8-1452	BLOWER SUCTION BOX	1
5	255-1106	VAC BOX LID	1	17	8-1453	BLOWER BOX LID	1
6	290-250	VAC MOTOR, 3 HP, TANGENTAL	2	18	8-887	BLOWER WAND	1
7	349-0111	4:1 X 1-1/2" DIA HOSE	1	19	H-01200	PROTECTIVE BOOT, TOGGLE SWITCH, (BLACK)	1
8	349-0112	SUCTION HOSE 1	1	20	H-250HCN	HCN 1/4"-20	4
9	349-0112	SUCTION HOSE 2	1	21	H-62044	CLAMP 1.0"- 2.0" SS	4
10	349-0112	SUCTION HOSE 3	1	22	H-71063	LW 1/4" SS	4
11	370-2331	RELAY, 36V, SMALL W/FLAT MTG PLATE	1	23	H-73754	BHSCS 1/4 - 20 X 3/4" SS	4
12	4-124	LATCH	1	24	H-9307K74	GROMMET, 1" ID X 1-3/4" OD BUNA-N	2

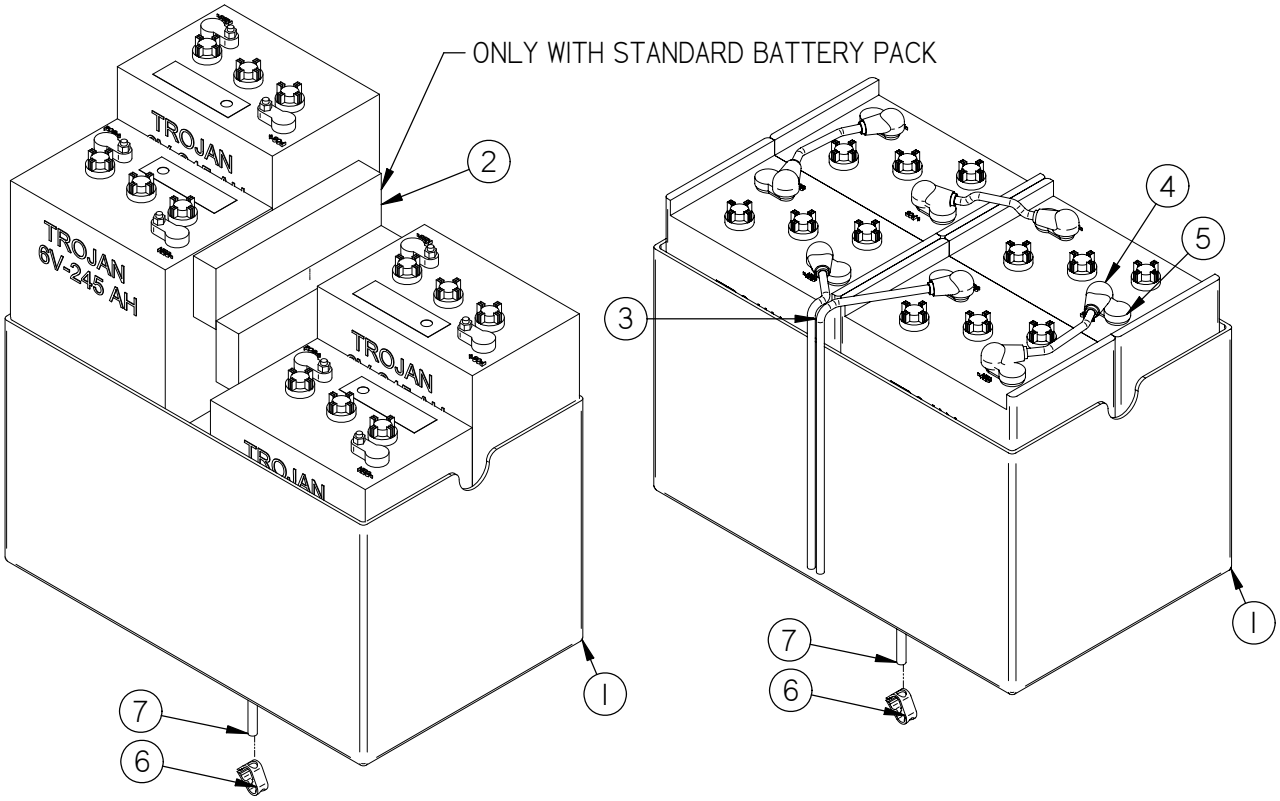

Item	Part No.	Part Description	Qty.
1	253-1480	MAGNUM SERIES BATTERY TRAY	1
2	290-1490	BATTERY SPACER, 11.0"	2
3	349-1900	WIRE HARNESS, COMPLETE	1
4	H-40031	BATTERY BOOT	8
5	H-400317	TERMINAL COVER	8
6	M-5031K12	CLAMP STYLE PINCH VALVE	1
7	T-031B1200	BLACK DRAIN HOSE	1

24-V

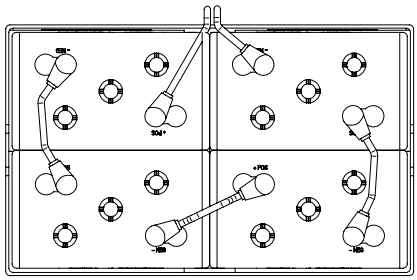

(4) 6-V BATTERY WIRING DIAGRAM

WHICH BATTERY CHARGER TO USE WITH BATTERY SELECTION				
Battery Part Number & Description	Off-Board Charger North American	Off-Board Charger Export	On-Board Charger North American	On-Board Charger Export
250-2113 (6V, 240 AH)	21-2440	21-2442	8-244	8-246
370-2118 (6V, 420 AH)	7-244	7-251	8-245	8-247
250-2114 (6V, 260 AGM.)	21-2450	21-2451	N/A	N/A
290-2112 (6V, 390 AGM)	7-2450	7-2451	N/A	N/A

Note: Japan & Korea are not included for list above.

CYLINDRICAL BROOMS:

BROOM TYPE	PART #'S
Poly	8-401
Nylon	8-401N
Carpet Broom	8-401NN
Poly & Steel	8-401S
Union	8-401U
Union & Steel	8-401US

SIDE BROOMS:

SIDE BROOM TYPE	PART#'S
Poly	4-402
Poly & Steel	4-402S

FILTER KITS:

FILTER TYPE	PART#'S
Standard Filter Assembly (Includes Tape Seal Kit, Grill, and Filter)	4-500
Standard Filter Kit (Includes Tape Seal Kit and Filter)	4-502D
1 Micron Filter	4-502
0.2 Micron Filter	4-502F
Nomex Filter	4-502N
Filter Tape Seal Kit	4-502K

SEAL KITS:

SEAL KIT	PART#'S
Neoprene Seal Set	349-5700
Urethane Seal Set	349-5700U

TR Suggested Parts Inventory

Quantity	Part #	Description
1	349-5710	Hopper Flap
2	349-9510	Hopper Side Curtain
1	349-1165	Curtain, Rear Wall
1	8-220	Side Broom Motor
2	4-402	Side Broom Polypropylene
1	H-0156730	1/4" x 1 1/2" Clevis pin
1	H-RUE8	Rue Ring Cotter 1/4"
1	4-319	Tension Spring
1	8-262	Hour Meter
1	349-2013	Control Panel Sticker Top
1	190-4855	Battery Meter
1	349-4852	Broom Pressure Gauge
1	8-231	Switch. On-Off, Rocker Switch
1	349-2331	Relay, 24V, Small w/flat MTG plate
1	H-01196	Protective Boot, Toggle Switch (RED)
1	349-3020	Main Broom Belt
1	8-301	Motor to Jack Shaft Belt
1	8-244	Battery Charger, Onboard, 24 Volt, 25 Amp, 110Volt A/C
1	370-7201	Factory Cat Decal - Front Apron
1	370-7202	Tomcat Decal - Front Apron
2	349-2005	TR Sticker

BLANK

THIS PAGE WAS INTENTIONALLY LEFT BLANK

BLANK

THIS PAGE WAS INTENTIONALLY LEFT BLANK

1711 South Street
Racine, WI 53404
www.factorycat.com
Tel. US: 800-634-4060
Tel. Int: (+001) 262-681-3583

© RPS Corporation 2017